# CERTIFICATION OF TAX DEED APPLICATION

Sections 197.502 and 197.542, Florida Statutes

FLORIDA



1025-54

## Part 1: Tax Deed Application Information

| | | | |
|---|---|---|---|
| Applicant Name<br>Applicant Address | KEYS FUNDING LLC - 5023<br>PO BOX 71540<br>PHILADELPHIA, PA 19176-1540 | Application date | Apr 21, 2025 |
| Property description | A & L PROPERTIES LLC<br>1906 ATHENS AVE<br>PENSACOLA, FL 32507<br>3636 N L ST BLDG D<br>05-1838-585<br>BEG AT NW COR OF LOT 1 BEING NE COR LOT 205 HYER PLACE S/D PB 1 P 92 S 01 DEG 37 MIN 30 SEC W ALG W (Full legal attached.) | Certificate # | 2023 / 1960 |
| | | Date certificate issued | 06/01/2023 |

## Part 2: Certificates Owned by Applicant and Filed with Tax Deed Application

| **Column 1** Certificate Number | **Column 2** Date of Certificate Sale | **Column 3** Face Amount of Certificate | **Column 4** Interest | **Column 5: Total** (Column 3 + Column 4) |
|---|---|---|---|---|
| # 2023/1960 | 06/01/2023 | 7,827.26 | 391.36 | 8,218.62 |
| | | | **➔Part 2: Total*** | **8,218.62** |

## Part 3: Other Certificates Redeemed by Applicant (Other than County)

| **Column 1** Certificate Number | **Column 2** Date of Other Certificate Sale | **Column 3** Face Amount of Other Certificate | **Column 4** Tax Collector's Fee | **Column 5** Interest | **Total** (Column 3 + Column 4 + Column 5) |
|---|---|---|---|---|---|
| # 2024/2129 | 06/01/2024 | 8,680.51 | 6.25 | 576.89 | 9,263.65 |
| | | | | **Part 3: Total*** | **9,263.65** |

## Part 4: Tax Collector Certified Amounts (Lines 1-7)

| | |
|---|---|
| 1. Cost of all certificates in applicant's possession and other certificates redeemed by applicant (*Total of Parts 2 + 3 above) | 17,482.27 |
| 2. Delinquent taxes paid by the applicant | 0.00 |
| 3. Current taxes paid by the applicant | 7,406.95 |
| 4. Property information report fee | 200.00 |
| 5. Tax deed application fee | 175.00 |
| 6. Interest accrued by tax collector under s.197.542, F.S. (see Tax Collector Instructions, page 2) | 0.00 |
| 7. **Total Paid** (Lines 1-6) | 25,264.22 |

I certify the above information is true and the tax certificates, interest, property information report fee, and tax collector's fees have been paid, and that the property information statement is attached.

Sign here: _____
Signature, Tax Collector or Designee

Escambia, Florida

Date April 24th, 2025

*Send this certification to the Clerk of Court by 10 days after the date signed. See Instructions on Page 2*

| Part 5: Clerk of Court Certified Amounts (Lines 8-14) | |
|---|---|
| 8. Processing tax deed fee | |
| 9. Certified or registered mail charge | |
| 10. Clerk of Court advertising, notice for newspaper, and electronic auction fees | |
| 11. Recording fee for certificate of notice | |
| 12. Sheriff's fees | |
| 13. Interest (see Clerk of Court Instructions, page 2) | |
| 14. **Total Paid** (Lines 8-13) | |
| 15. Plus one-half of the assessed value of homestead property, if applicable under s. 197.502(6)(c), F.S. | |
| 16. Statutory opening bid (total of Lines 7, 14, 15, and 16 if applicable) | |
| | |

Sign here: _____ Date of sale 10/01/2025
Signature, Clerk of Court or Designee

## INSTRUCTIONS

**Tax Collector (complete Parts 1-4)**

**Part 2: Certificates Owned by Applicant and Filed with Tax Deed Application**
Enter the Face Amount of Certificate in Column 3 and the Interest in Column 4 for each certificate number. Add Columns 3 and 4 and enter the amount in Column 5.

**Part 3: Other Certificates Redeemed by Applicant (Other than County)**
**Total.** Add the amounts in Columns 3, 4 and 5

**Part 4: Tax Collector Certified Amounts (Lines 1-7)**

**Line 1**, enter the total of Part 2 plus the total of Part 3 above.

**Total Paid, Line 7:** Add the amounts of Lines 1-6

**Line 6, Interest accrued by tax collector**. Calculate the 1.5 percent interest accrued from the month after the date of application through the month this form is certified to the clerk. Enter the amount to be certified to the clerk on **Line 6**. The interest calculated by the tax collector stops before the interest calculated by the clerk begins. See Section 197.542, F.S., and Rule 12D-13.060(3), Florida Administrative Code.

The tax collector's interest for redemption at the time of the tax deed application is a cost of redemption, which encompasses various percentages of interest on certificates and omitted or delinquent taxes under Section 197.502, F.S. This interest is calculated before the tax collector calculates the interest in Section 197.542, F.S.

Attach certified statement of names and addresses of persons who must be notified before the sale of the property. Send this form and any required attachments to the Clerk of Court within 10 days after it is signed.

**Clerk of Court (complete Part 5)**

**Line 13: Interest** is calculated at the rate of 1.5 percent per month starting from the first day of the month after the month of certification of this form through the last day of the month in which the sale will be held. Multiply the calculated rate by the total of **Line 7**, minus **Line 6**, plus **Lines 8** through **12**. Enter the amount on **Line 13**.

**Line 14:** Enter the total of Lines 8-13. Complete Lines 15-18, if applicable.

BEG AT NW COR OF LOT 1 BEING NE COR LOT 205 HYER PLACE S/D PB 1 P 92 S 01 DEG 37 MIN 30 SEC W ALG W LI OF SD LOT 1 (E LI OF LOT 205) 25 FT S 88 DEG 30 MIN 00 SEC E 50 FT TO E R/W LI OF L ST(50 FT R/W) S 01 DEG 37 MIN 30 SEC W ALG SD E R/W LI 623 57/100 FT TO POB S 01 DEG 37 MIN 30 SEC W ALG SD E R/W LI 192 60/100 FT S 88 DEG 30 MIN 00 SEC E 165 FT N 01 DEG 37 MIN 30 SEC E 192 60/100 FT N 88 DEG 30 MIN 00 SEC W 165 FT TO POB OR 7644 P 1072

# APPLICATION FOR TAX DEED

Section 197.502, Florida Statutes

512
R. 12/16

Application Number: 2500386

To: Tax Collector of ESCAMBIA COUNTY, Florida

I,
KEYS FUNDING LLC - 5023
PO BOX 71540
PHILADELPHIA, PA 19176-1540,
hold the listed tax certificate and hereby surrender the same to the Tax Collector and make tax deed application thereon:

| Account Number | Certificate No. | Date | Legal Description |
|---|---|---|---|
| 05-1838-585 | 2023/1960 | 06-01-2023 | BEG AT NW COR OF LOT 1 BEING NE COR LOT 205 HYER PLACE S/D PB 1 P 92 S 01 DEG 37 MIN 30 SEC W ALG W LI OF SD LOT 1 (E LI OF LOT 205) 25 FT S 88 DEG 30 MIN 00 SEC E 50 FT TO E R/W LI OF L ST(50 FT R/W) S 01 DEG 37 MIN 30 SEC W ALG SD E R/W LI 623 57/100 FT TO POB S 01 DEG 37 MIN 30 SEC W ALG SD E R/W LI 192 60/100 FT S 88 DEG 30 MIN 00 SEC E 165 FT N 01 DEG 37 MIN 30 SEC E 192 60/100 FT N 88 DEG 30 MIN 00 SEC W 165 FT TO POB OR 7644 P 1072 |

I agree to:

- pay any current taxes, if due and
- redeem all outstanding tax certificates plus interest not in my possession, and
- pay all delinquent and omitted taxes, plus interest covering the property.
- pay all Tax Collector's fees, property information report costs, Clerk of the Court costs, charges and fees, and Sheriff's costs, if applicable.

Attached is the tax sale certificate on which this application is based and all other certificates of the same legal description which are in my possession.

Electronic signature on file
KEYS FUNDING LLC - 5023
PO BOX 71540
PHILADELPHIA, PA 19176-1540

Applicant's signature

04-21-2025
Application Date

# Gary "Bubba" Peters
# Escambia County Property Appraiser

**Real Estate Search** **Tangible Property Search** **Sale List**

Back

Nav. Mode ◉ Account ○ Parcel ID

Printer Friendly Version

## General Information

| | |
|---|---|
| **Parcel ID:** | 082S301001007003 |
| **Account:** | 051838585 |
| **Owners:** | A & L PROPERTIES LLC |
| **Mail:** | 1906 ATHENS AVE<br>PENSACOLA, FL 32507 |
| **Situs:** | 3636 N L ST BLDG D 32505 |
| **Use Code:** | REPAIR SERVICE |
| **Taxing Authority:** | COUNTY MSTU |
| **Tax Inquiry:** | Open Tax Inquiry Window |

Tax Inquiry link courtesy of Scott Lunsford
Escambia County Tax Collector

## Assessments

| Year | Land | Imprv | Total | Cap Val |
|---|---|---|---|---|
| 2024 | $51,100 | $464,240 | $515,340 | $515,340 |
| 2023 | $43,800 | $539,875 | $583,675 | $535,790 |
| 2022 | $43,800 | $452,791 | $496,591 | $487,082 |

**Disclaimer**

**Tax Estimator**

**Change of Address**

**Report Storm Damage**

**Enter Income & Expense Survey**
**Download Income & Expense Survey**

## Sales Data Type List:

| Sale Date | Book | Page | Value | Type | Multi Parcel | Records |
|---|---|---|---|---|---|---|
| 12/21/2016 | 7644 | 1072 | $425,000 | WD | N | |
| 10/2006 | 6019 | 176 | $100 | OT | N | |

Official Records Inquiry courtesy of Pam Childers
Escambia County Clerk of the Circuit Court and Comptroller

## 2024 Certified Roll Exemptions

None

## Legal Description

BEG AT NW COR OF LOT 1 BEING NE COR LOT 205 HYER PLACE S/D PB 1 P 92 S 01 DEG 37 MIN 30 SEC W ALG W LI OF SD LOT 1 (E...

## Extra Features

ASPHALT PAVEMENT

## Parcel Information

Launch Interactive Map

**Section Map Id:** 08-2S-30-2

**Approx. Acreage:** 0.7311

**Zoned:** HC/LI

**Evacuation & Flood Information** Open Report

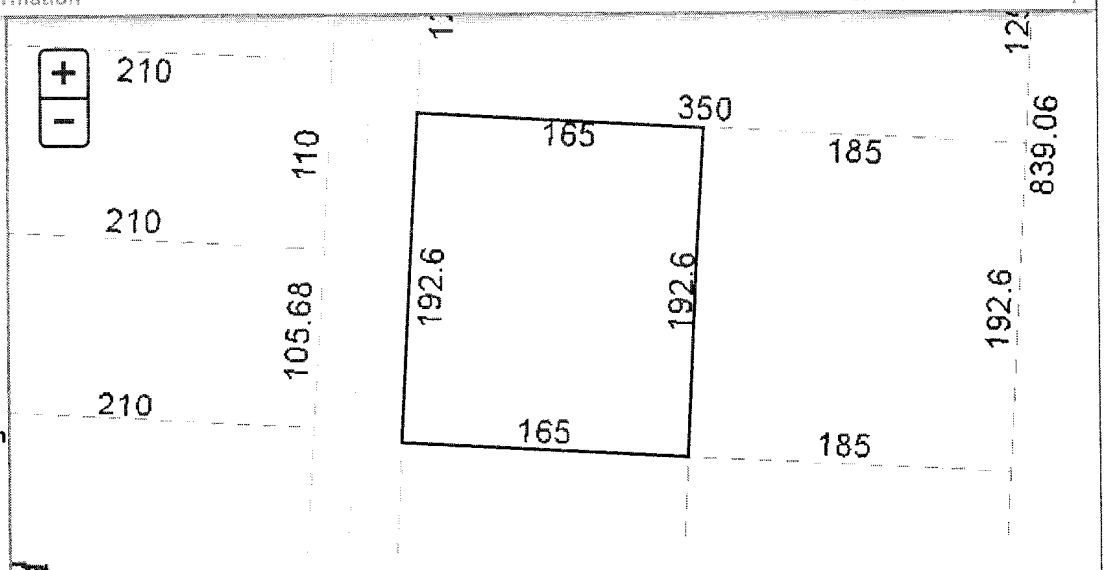


View Florida Department of Environmental Protection(DEP) Data

## Buildings

Address:3636 N L ST BLDG D, Improvement Type: PRE-FAB METAL, Year Built: 1985, Effective Year: 2000, PA Building ID#: 72761

Structural Elements

**DECOR/MILLWORK**-*NONE*
**DWELLING UNITS**-*0*
**EXTERIOR WALL**-*BRICK-FACE/VENEER*
**EXTERIOR WALL**-*METAL-MODULAR*
**FLOOR COVER**-*CONCRETE-FINISH*
**FOUNDATION**-*SLAB ABOVE GRDE*
**HEAT/AIR**-*UNIT HEATERS*
**INTERIOR WALL**-*DRYWALL-PLASTER*
**NO. PLUMBING FIXTURES**-*8*
**NO. STORIES**-*1*
**ROOF COVER**-*METAL/MODULAR*
**ROOF FRAMING**-*STEEL TRUSS/FRM*
**STORY HEIGHT**-*13*
**STRUCTURAL FRAME**-*RIGID FRAME*

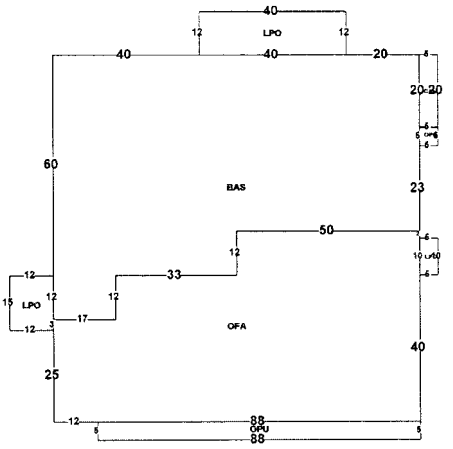


Areas - 11275 Total SF

**BASE AREA** - *5604*
**CANOPY** - *100*
**LOADING PLATFORM OPEN** - *710*
**OFFICE AVG** - *4396*
**OPEN PORCH UNF** - *465*

Images

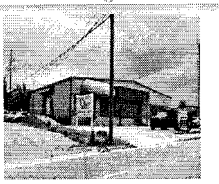

5/9/2025 12:00:00 AM

The primary use of the assessment data is for the preparation of the current year tax roll. No responsibility or liability is assumed for inaccuracies or errors.

Last Updated:05/12/2025 (tc 3455)

Pam Childers
CLERK OF THE CIRCUIT COURT
ESCAMBIA COUNTY FLORIDA
INST# 2025034510 5/13/2025 1:28 PM
OFF REC BK: 9316 PG: 912 Doc Type: TDN

# NOTICE OF APPLICATION FOR TAX DEED

NOTICE IS HEREBY GIVEN, That **KEYS FUNDING LLC** holder of **Tax Certificate No. 01960**, issued the **1st** day of **June, A.D., 2023** has filed same in my office and has made application for a tax deed to be issued thereon. Said certificate embraces the following described property in the County of Escambia, State of Florida, to wit:

**BEG AT NW COR OF LOT 1 BEING NE COR LOT 205 HYER PLACE S/D PB 1 P 92 S 01 DEG 37 MIN 30 SEC W ALG W LI OF SD LOT 1 (E LI OF LOT 205) 25 FT S 88 DEG 30 MIN 00 SEC E 50 FT TO E R/W LI OF L ST(50 FT R/W) S 01 DEG 37 MIN 30 SEC W ALG SD E R/W LI 623 57/100 FT TO POB S 01 DEG 37 MIN 30 SEC W ALG SD E R/W LI 192 60/100 FT S 88 DEG 30 MIN 00 SEC E 165 FT N 01 DEG 37 MIN 30 SEC E 192 60/100 FT N 88 DEG 30 MIN 00 SEC W 165 FT TO POB OR 7644 P 1072**

**SECTION 08, TOWNSHIP 2 S, RANGE 30 W**

**TAX ACCOUNT NUMBER 051838585 (1025-54)**

The assessment of the said property under the said certificate issued was in the name of

**A & L PROPERTIES LLC**

Unless said certificate shall be redeemed according to law, the property described therein will be sold to the highest bidder at public auction at 9:00 A.M. on the **first** Wednesday in the month of October, which is the **1st day of October 2025.**

Dated this 13th day of May 2025.

In accordance with the AMERICANS WITH DISABILITIES ACT, if you are a person with a disability who needs special accommodation in order to participate in this proceeding you are entitled to the provision of certain assistance. Please contact Emily Hogg not later than seven days prior to the proceeding at Escambia County Government Complex, 221 Palafox Place Ste 110, Pensacola FL 32502. Telephone: 850-595-3793.

PAM CHILDERS
CLERK OF THE CIRCUIT COURT
ESCAMBIA COUNTY, FLORIDA

By:
Emily Hogg
Deputy Clerk

| Search Property | Property Sheet | Lien Holder's | Redeem_New | Forms | Courtview | Benchmark |
|---|---|---|---|---|---|---|
| Redeemed From Sale | | | | | | |

# PAM CHILDERS
# CLERK OF THE CIRCUIT COURT
# ESCAMBIA COUNTY, FLORIDA

## Tax Deed Sales - Redeemed From Sale

**Account: 051838585 Certificate Number: 001960 of 2023**

Date Of Redemption: 6/17/2025

Clerk's Check: 1

Clerk's Total $784.80

Postage: $0.00

Tax Deed Court Registry $750.80

Payor Name:
MOORHEAD LAW GROUP PLLC REAL ESTATE IOTA TRUST ACCOUNT
127 PALAFOX PLACE SUITE 200
PENSACOLA FL 32502

Notes:

Submit | Reset | Print Preview | Print Receipt

**Commit Redemption** ☑

# PERDIDO TITLE SOLUTIONS

Precise · Professional · Proven

**PROPERTY INFORMATION REPORT**

**3050 Concho Drive, Pensacola, Florida 32507 | Phone: 850-466-3077**

THE ATTACHED REPORT IS ISSUED TO:

SCOTT LUNSFORD, ESCAMBIA COUNTY TAX COLLECTOR

TAX ACCOUNT #: **05-1838-585** CERTIFICATE #: **2023-1960**

THIS REPORT IS NOT TITLE INSURANCE. THE LIABILITY FOR ERRORS OR OMISSIONS IN THIS REPORT IS LIMITED TO THE PERSON(S) EXPRESSLY IDENTIFIED BY NAME IN THE PROPERTY INFORMATION REPORT AS THE RECIPIENT(S) OF THE PROPERTY INFORMATION REPORT.

The attached Report prepared in accordance with the instructions given by the user named above includes a listing of the owner(s) of record of the land described herein together with current and delinquent ad valorem tax information and a listing and copies of all open or unsatisfied leases, mortgages, judgments and encumbrances recorded in the Official Record Books of Escambia County, Florida that encumber the title to said land as listed on page 2 herein.

**This Report is subject to:** Current year taxes; taxes and assessments due now or in subsequent years; oil, gas, and mineral or any subsurface rights of any kind or nature; easements, restrictions, and covenants of record; encroachments, overlaps, boundary line disputes.

This Report does not insure or guarantee the validity or sufficiency of any document attached, nor is it to be considered a title insurance policy, an opinion of title, a guarantee of title, or any other form of guarantee or warranty of title.

Use of the term "Report" herein refers to the Property Information Report and the documents attached hereto.

Period Searched: **July 15, 2005 to and including July 15, 2025** Abstractor: **Andrew Hunt**

BY

Michael A. Campbell,
As President
Dated: July 16, 2025

**PROPERTY INFORMATION REPORT**
CONTINUATION PAGE

July 16, 2025
Tax Account #: **05-1838-585**

1. The Grantee(s) of the last deed(s) of record is/are: **BLACK KNIGHT INVESTMENTS, L.L.C., AN ALABAMA LIMITED LIABILITY COMPANY**

   **By Virtue of WARRANTY DEED recorded 6/16/2025 in OR 9334/304**

2. The land covered by this Report is: **See Attached Exhibit "A"**

3. The following unsatisfied mortgages, liens, and judgments affecting the land covered by this Report appear of record:
   a. **Mortgage in favor of Robertson Banking Company recorded 6/16/2025 – OR 9334/307 together with Assignment of Leases Rents and Profits OR 9334/400 and UCC Financing Statement OR 9334/409**
   b. **Lien in favor of Emerald Coast Utilities Authority recorded 3/23/2018 – OR 7874/420**

4. Taxes:

   **Taxes for the year(s) NONE are delinquent.**
   **Tax Account #: 05-1838-585**
   **Assessed Value: $515,340.00**
   **Exemptions: NONE**

5. We find the following HOA names in our search (if a condominium, the condo docs book, and page are included for your review): **NONE**

Payment of any special liens/assessments imposed by City, County, and/or State.

Note: Escambia County and/or local municipalities may impose special liens/assessments. These liens/assessments are not discovered in a Property Information Report or shown above. These special assessments typically create a lien on real property. The entity that governs subject property must be contacted to verify payment status.

**PERDIDO TITLE SOLUTIONS**
**PROPERTY INFORMATION REPORT**
**3050 Concho Drive, Pensacola, Florida 32507 | Phone 850-466-3077**

**Scott Lunsford**
**Escambia County Tax Collector**
P.O. Box 1312
Pensacola, FL 32591

**CERTIFICATION: PROPERTY INFORMATION REPORT FOR TDA**

**TAX DEED SALE DATE:** **OCT 1, 2025**

**TAX ACCOUNT #:** **05-1838-585**

**CERTIFICATE #:** **2023-1960**

**In compliance with Section 197.522, Florida Statutes, the following is a list of names and addresses of those persons, firms, and/or agencies having legal interest in or claim against the above-described property. The above-referenced tax sale certificate is being submitted as proper notification of tax deed sale.**

| YES | NO | |
|---|---|---|
| ☐ | ☒ | **Notify City of Pensacola, P.O. Box 12910, 32521** |
| ☐ | ☒ | **Notify Escambia County, 190 Governmental Center, 32502** |
| ☐ | ☒ | **Homestead for 2024 tax year.** |

**A & L PROPERTIES LLC**
**1906 ATHENS AVE**
**PENSACOLA, FL 32507**

**A & L PROPERTIES LLC**
**3636 N L ST BLDG D**
**PENSACOLA, FL 32505**

**A & L PROPERTES LLC REGISTERED AGENT**
**REGISTERED AGENTS INC**
**7901 4TH ST N STE 300**
**ST PETERSBURG, FL 33702**

**BLACK KNIGHT INVESTMENTS LLC**
**1601 HACKBERRY LN**
**TUSCALOOSA, AL 35401**

**EMERALD COAST**
**UTILITIES AUHORITY**
**9255 STURDEVANT ST**
**PENSACOLA, FL 32514-0311**

**ROBERTSON BANKING COMPANY**
**1400 GREENSBORO AVE**
**TUSCALOOSA, AL 35401**

**Certified and delivered to Escambia County Tax Collector, this 16th day of July 2025.**

**PERDIDO TITLE SOLUTIONS, A DIVISION OF**
**PERDIDO TITLE & ABSTRACT, INC.**

BY: Michael A. Campbell, As Its President

NOTE: The above-mentioned addresses are based upon current information available, but addresses are not guaranteed to be true or correct.

# PROPERTY INFORMATION REPORT

**July 16, 2025**
**Tax Account #:05-1838-585**

## LEGAL DESCRIPTION
## EXHIBIT "A"

**BEG AT NW COR OF LOT 1 BEING NE COR LOT 205 HYER PLACE S/D PB 1 P 92 S 01 DEG 37 MIN 30 SEC W ALG W LI OF SD LOT 1 (E LI OF LOT 205) 25 FT S 88 DEG 30 MIN 00 SEC E 50 FT TO E R/W LI OF L ST(50 FT R/W) S 01 DEG 37 MIN 30 SEC W ALG SD E R/W LI 623 57/100 FT TO POB S 01 DEG 37 MIN 30 SEC W ALG SD E R/W LI 192 60/100 FT S 88 DEG 30 MIN 00 SEC E 165 FT N 01 DEG 37 MIN 30 SEC E 192 60/100 FT N 88 DEG 30 MIN 00 SEC W 165 FT TO POB OR 7644 P 1072**

**SECTION 08, TOWNSHIP 2 S, RANGE 30 W**

**TAX ACCOUNT NUMBER 05-1838-585(1025-54)**

**Recorded in Public Records 6/16/2025 3:44 PM OR Book 9334 Page 304, Instrument #2025045036, Pam Childers Clerk of the Circuit Court Escambia County, FL Recording $27.00 Deed Stamps $2,800.00**

Prepared by:
Stephen R. Moorhead, Esquire
Moorhead Law Group
127 Palafox Place, Suite 200
Pensacola, FL 32502
Matter ID RE-25-1155

# WARRANTY DEED

STATE OF FLORIDA
COUNTY OF ESCAMBIA

KNOW ALL MEN BY THESE PRESENTS: that A & L PROPERTIES OF PENSACOLA, LLC, a Florida limited liability company, f/k/a A & L PROPERTIES, LLC, whose address is 1906 Athens Ave., Pensacola, FL 32507, hereinafter called Grantor, for and in consideration of the sum of Ten and No/100 Dollars ($10.00) and other good and valuable consideration, the receipt and sufficiency whereof are hereby acknowledged, does grant, bargain, sell and convey the below-described property, situate, lying and being in the County of Escambia, State of Florida, unto BLACK KNIGHT INVESTMENTS, L.L.C., an Alabama limited liability company, whose mailing address is 1601 Hackberry Lane, Tuscaloosa, AL 35401, hereinafter called Grantee, its successors and assigns:

SEE EXHIBIT "A" ATTACHED HERETO
AND INCORPORATED HEREIN BY REFERENCE

And Grantors do hereby fully warrant the title to the property and will defend the same against the lawful claims of all persons whomsoever. Subject to taxes for the current and subsequent years and restrictions and reservations of record which are not hereby reimposed.

*(end of text – signature pages to follow)*

IN WITNESS WHEREOF, I have hereunto set my hand and seal on this the 6th day of June, 2025.

Witnesses:

A & L PROPERTIES OF PENSACOLA, LLC, a Florida limited liability company f/k/a A & L PROPERTIES, LLC

Print Name: Ariella Brown
Mailing Address: 127 Palafox Place Ste 200
Pensacola, FL 32502

By: Andrew N. Dennis, III
Its: Manager

Print Name: Andrea Bennett
Mailing Address: 127 Palafox Place Ste 200
Pensacola, FL 32502

STATE OF FLORIDA
COUNTY OF ESCAMBIA

The foregoing instrument was acknowledged before me by means of [✓] physical presence or [ ] online notarization this 6th day of June, 2025, by Andrew N. Dennis, III, as Manager of A & L Properties of Pensacola, LLC, a Florida limited liability company f/k/a A & L Properties, LLC, on behalf of the company.

NOTARY PUBLIC

☐ Personally Known
or
☑ Produced Identification
Type of Identification Produced FL DL

ANDREA BENNETT
NOTARY PUBLIC
MY COMMISSION EXPIRES 3-7-2029
STATE OF FLORIDA
COMMISSION NUMBER HH 647489

## EXHIBIT "A"

COMMENCE AT THE NORTHWEST CORNER OF LOT 1, BEING THE NORTHEAST CORNER OF LOT 205, HYER PLACE, A SUBDIVISION OF A PORTION OF SECTIONS 8 AND 9, TOWNSHIP 2 SOUTH, RANGE 30 WEST, AS RECORDED IN PLAT BOOK 1 AT PAGE 92, OF THE PUBLIC RECORDS OF ESCAMBIA COUNTY, FLORIDA; THENCE SOUTH 01 DEGREES 37 MINUTES 30 SECONDS WEST ALONG THE WEST LINE OF SAID LOT 1 (EAST LINE OF LOT 205) FOR A DISTANCE OF 25.00 FEET; THENCE SOUTH 88 DEGREES 30 MINUTES 00 SECONDS EAST FOR A DISTANCE OF 50.00 FEET TO THE EAST RIGHT OF WAY LINE OF "L" STREET (50' R/W); THENCE SOUTH 01 DEGREES 37 MINUTES 30 SECONDS WEST ALONG SAID EAST RIGHT OF WAY LINE FOR A DISTANCE OF 623.57 FEET TO THE POINT OF BEGINNING; THENCE CONTINUE SOUTH 01 DEGREES 37 MINUTES 30 SECONDS WEST ALONG SAID EAST RIGHT OF WAY LINE FOR A DISTANCE OF 192.60 FEET; THENCE SOUTH 88 DEGREES 30 MINUTES 00 SECONDS EAST FOR A DISTANCE OF 165.00 FEET; THENCE NORTH 01 DEGREES 37 MINUTES 30 SECONDS EAST FOR A DISTANCE OF 192.60 FEET; THENCE NORTH 88 DEGREES 30 MINUTES 00 SECONDS WEST FOR A DISTANCE OF 165.00 FEET TO THE POINT OF BEGINNING.

TOGETHER WITH EASEMENT FOR INGRESS AND EGRESS OVER:

THAT PORTION OF LOT 1 SECTION 8, TOWNSHIP 2 SOUTH, RANGE 30 WEST, ESCAMBIA COUNTY, FLORIDA, DESCRIBED AS FOLLOWS: COMMENCE AT THE NORTHWEST CORNER OF SAID LOT 1, BEING THE NORTHEAST CORNER OF LOT 205, HYER PLACE, A SUBDIVISION OF A PORTION OF SECTIONS 8 AND 9, TOWNSHIP 2 SOUTH, RANGE 30 WEST, AS RECORDED IN PLAT BOOK 1 AT PAGE 92, OF THE PUBLIC RECORDS OF SAID COUNTY; THENCE SOUTH 01 DEGREES 37 MINUTES 30 SECONDS WEST ALONG THE WEST LINE OF SAID LOT 1, (EAST LINE OF LOT 205) FOR A DISTANCE OF 25.00 FEET; THENCE SOUTH 88 DEGREES 30 MINUTES 00 SECONDS EAST FOR A DISTANCE OF 50.00 FEET TO THE EAST RIGHT OF WAY LINE OF "L" STREET (50' R/W); THENCE SOUTH 01 DEGREES 37 MINUTES 30 SECONDS WEST ALONG SAID EAST RIGHT OF WAY LINE FOR A DISTANCE OF 816.17 FEET TO THE POINT OF BEGINNING; THENCE CONTINUE SOUTH 01 DEGREES 37 MINUTES 30 SECONDS WEST ALONG THE EAST RIGHT OF WAY LINE FOR A DISTANCE OF 20.00 FEET; THENCE SOUTH 88 DEGREES 30 MINUTES 00 SECONDS EAST FOR A DISTANCE OF 350.00 FEET; THENCE NORTH 01 DEGREES 37 MINUTES 30 SECONDS EAST FOR A DISTANCE OF 20.00 FEET; THENCE NORTH 88 DEGREES 30 MINUTES 00 SECONDS WEST FOR A DISTANCE OF 350.00 FEET TO THE POINT OF BEGINNING.

**Recorded in Public Records 6/16/2025 3:44 PM OR Book 9334 Page 307, Instrument #2025045037, Pam Childers Clerk of the Circuit Court Escambia County, FL Recording $188.50 MTG Stamps $1,190.00 Int. Tax $680.00**

Prepared by and return to:
Stephen R. Moorhead, Esquire
Moorhead Law Group
127 Palafox Place, Suite 200
Pensacola, Florida 32502
Matter ID RE-25-1155

THIS IS A BALLOON MORTGAGE AND THE FINAL PRINCIPAL BALANCE, TOGETHER WITH ACCRUED INTEREST, IF ANY, AND ALL ADVANCEMENTS MADE BY THE MORTGAGEE UNDER THE TERMS OF THIS MORTGAGE, SHALL BE DUE UPON MATURITY.

THIS MORTGAGE IS TO BE FILED IN THE PUBLIC RECORDS OF ESCAMBIA COUNTY AND SHALL CONSTITUTE A FIXTURE FILING IN ACCORDANCE WITH THE PROVISIONS OF CHAPTER 679 OF THE FLORIDA STATUTES.

# MORTGAGE AND SECURITY AGREEMENT

THIS MORTGAGE AND SECURITY AGREEMENT (the "Mortgage") is made, executed and delivered as of the 6th day of June, 2025, by Black Knight Investments, LLC, an Alabama limited liability company ("Borrower"), having an address at 1601 Hackberry Lane, Tuscaloosa, AL 35401, to and in favor of Robertson Banking Company, its successors and assigns ("Lender"), having an office at 1400 Greensboro Avenue, Tuscaloosa, AL 35401.

## WITNESSETH:

WHEREAS, Borrower is justly indebted to Lender in the original principal sum of THREE HUNDRED FORTY THOUSAND AND NO/100 DOLLARS ($340,000.00) with interest thereon, which indebtedness is evidenced by that certain Promissory Note of even date herewith in such amount made by Borrower in favor of Lender (together with all amendments thereto and all other notes given in substitution, modification, increase, renewal or extension thereof, in whole or in part, hereinafter referred to as the "Note"); and

WHEREAS, Lender, as a condition precedent to the extension of credit and the making of the loan evidenced by the Note (the "Loan"), has required that Borrower provide Lender with security for the repayment of the indebtedness evidenced by the Note, as well as for the performance, observance and discharge by Borrower of the covenants, conditions and agreements made by Borrower to, with, in favor of and for the benefit of Lender with respect to said indebtedness and such security.

NOW, THEREFORE, in consideration of and in order to secure the repayment of the indebtedness evidenced by the Note, together with interest on such indebtedness, as well as the payment of all other sums of money secured hereby, as hereinafter provided, and also to secure the observance, performance and discharge by Borrower of all covenants, conditions and agreements set forth in the Note, this Mortgage and in all other documents and instruments executed and delivered by Borrower to and in favor of Lender for the purpose of further securing

the repayment of the indebtedness evidenced and represented by the Note (collectively, the "Loan Documents"), and in order to charge the properties, interests and rights hereinafter described with such payment, observance, performance and discharge, and for other good and valuable considerations, the receipt and sufficiency of which are hereby acknowledged, Borrower does hereby grant, bargain, sell, alien, remise, release, convey, assign, transfer, pledge, deliver, set over, hypothecate, warrant and confirm unto Lender, its successors and assigns forever, all of Borrower's right, title and interest in and to the following described properties, rights and interests and all replacements thereof, substitutions therefor and additions thereto (all of which are hereinafter together referred to as the "Property"):

ALL THAT certain piece, parcel or tract of land or real property of which Borrower is now seized and in actual or constructive possession, situated in Escambia County, Florida, as more particularly described on Exhibit "A" attached hereto and by this reference made a part hereof (the "Real Property");

TOGETHER WITH all oil, gas and mineral rights, royalties, gas rights, water, water rights, water stock, flowers, shrubs, lawn plants, crops, trees, timber and other emblements now or hereafter located on, under or above all or any part of the Real Property;

TOGETHER WITH all and singular, the tenements, hereditaments, strips and gores, rights-of-way, easements, privileges and other appurtenances now or hereafter belonging or in any way appertaining to the Real Property including, without limitation, all right, title and interest of Borrower in any after-acquired right, title, interest, remainder or reversion in and to the beds of any ways, streets, avenues, roads, alleys, passages and public places, open or proposed, in front of, running through, adjoining or adjacent to said Real Property (the "Appurtenances");

TOGETHER WITH all buildings, structures and other improvements of any kind, nature or description now or hereafter erected, constructed, placed, located, or situated upon the Real Property (the "Improvements") including, without limitation, any and all additions to, substitutions for and replacements of such Improvements;

TOGETHER WITH all the rights, title and interests of Borrower in and to all fixtures, goods, inventory, chattels, construction supplies and materials, fittings, furniture, furnishings, equipment, machinery, apparatus, appliances, and other items of personal property, whether tangible or intangible, of any kind, nature or description, whether now owned or hereafter acquired by Borrower including, without limitation, all signs and displays; all heating, air conditioning, water, gas, lighting, incinerating, and power equipment; all engines, compressors, pipes, pumps, tanks, motors, conduits, wiring, and switchboards; all plumbing, lifting, cleaning, fire prevention, fire extinguishing, sprinkling, refrigerating, ventilating, waste removal and communications equipment and apparatus; all boilers, furnaces, oil burners, vacuum cleaning systems, elevators, and escalators; all stoves, ovens, ranges, disposal units, dishwashers, water heaters, exhaust systems, refrigerators, cabinets and partitions; all rugs, attached floor coverings, curtains, rods, draperies, and carpets; all building materials, tools, shades, awnings, blinds, screens, storm doors and windows; and all general intangibles, inventory, contract rights, accounts receivable, chattel paper, documents and business records, of every kind including, without limitation, any and all licenses, permits, franchises, trademarks, trade names, service marks, or logos; all other agreements, such as construction contracts, architects' agreements, engineers' contracts, utility

contracts, maintenance agreements, management agreements, service contracts, listing agreements, and guaranties, and all warranties, certificates and entitlements, and all choses in action; any of which is, are or shall hereafter be located upon, attached to, affixed to or used or useful, either directly or indirectly, in connection with the construction, use, occupancy, operation, maintenance, enjoyment or ownership of the Real Property, Improvements and Appurtenances (hereinafter sometimes referred to as the "Fixtures and Personal Property," which term expressly excludes any toxic wastes or substances deemed hazardous under federal, regional, state or local laws);

TOGETHER WITH any and all present or future leases, licenses, concessions, occupancy agreements, contracts, contract rights, rents, royalties, issues, revenues, income, profits, proceeds, accounts, bank accounts, deposits, reserves, security deposits, escrows, impounds, income and other benefits, including accounts receivable, of, accruing to or derived from the Real Property, Improvements and Appurtenances and any business or enterprise presently situated or hereafter operated thereon and therewith (hereinafter sometimes referred to as the "Rents");

TOGETHER WITH and all property tax refunds; and all insurance policies, unearned premiums therefor and proceeds from such policies covering any of the above property now owned or hereafter acquired by Borrower;

TOGETHER WITH any and all awards, payments or settlements, including interest thereon, and the right to receive the same, as a result of: (a) the exercise of the right to eminent domain; (b) the alteration of the grade of any street; (c) any other injury, damage or casualty to, taking of, or decrease in the value of, the Property; or (d) proceeds of insurance and condemnation awards, to the extent of all amounts which may be secured by this Mortgage at the date of any such award or payment including, but not limited to, Reasonable Attorneys' Fees (as hereinafter defined) and costs and disbursements incurred by Lender in connection with the collection of such award or payment; and

TOGETHER WITH all accessions, replacements and substitutions for any of the foregoing and all proceeds thereof.

TO HAVE AND TO HOLD the foregoing Property and the rights hereby granted for the use and benefit of Lender, its successors and assigns, in fee simple forever;

AND Borrower covenants and warrants with and to Lender that Borrower is indefeasibly seized of the Property and has good right, full power, and lawful authority to convey and encumber all of the same as aforesaid; that Borrower hereby fully warrants the title to the Property and will defend the same and the validity and priority of the lien and encumbrance of this Mortgage against the lawful claims of all persons whomsoever; and Borrower further warrants that the Property is free and clear of all liens and encumbrances of any kind, nature or description, save and except only (with respect to said Real Property and Appurtenances) for real property taxes for 2025 and subsequent years (which are not yet due and payable) and those matters set forth as exceptions in the Lender's Policy of Title Insurance insuring the first lien priority of this Mortgage (the "Permitted Exceptions");

PROVIDED ALWAYS, however, that if Borrower shall pay unto Lender the indebtedness evidenced by the Note, and if Borrower shall duly, promptly and fully perform, discharge, execute, effect, complete and comply with and abide by each and every one of the agreements, conditions and covenants of the Note, this Mortgage and all other documents and instruments executed as further evidence of or as security for the indebtedness secured hereby, then this Mortgage and the estates and interests hereby granted and created shall cease, terminate and be null and void, and shall be discharged of record at the expense of Borrower, which expense Borrower agrees to pay;

AND Borrower, for the benefit of Lender, and its successors and assigns, does hereby expressly covenant and agree:

1. Payment of Principal and Interest. To pay the principal of the indebtedness evidenced by the Note, together with all interest thereon, in accordance with the terms of the Note, promptly at the times, at the place and in the manner that said principal and interest shall become due, and to promptly and punctually pay all other sums required to be paid by Borrower pursuant to the terms of the Note, the Loan Agreement, this Mortgage, the Assignment of Leases, Rents and Profits (the "Assignment") and all other documents and instruments executed as further evidence of, as additional security for or in connection with the indebtedness evidenced by the Note and secured by aforementioned loan documents (collectively, the "Loan Documents").

2. Performance of Other Obligations. To perform, comply with and abide by each and every one of the covenants, agreements and conditions contained and set forth in the regulations and orders of any governmental authorities having jurisdiction over the Property which now or hereafter affect the Property or requires any alterations or improvements to be made thereon, and perform all of its obligations under any covenant, condition, restriction or agreement affecting the Property and to insure that at all times the Property constitutes one or more legal lots capable of being conveyed without violation of any applicable subdivision or platting laws, ordinances, rules or regulations, or other laws relating to the division or separation of real property.

3. Preservation and Maintenance of Property; Accessibility; Hazardous Waste.

(a) To keep all Improvements now existing or hereafter erected on the Real Property in good condition and repair and not to do or permit waste, impairment or deterioration thereof or thereon, nor to alter, remove or demolish any of the Improvements without the prior written consent of Lender, nor to initiate, join in or consent to any change in any private restrictive covenant, zoning ordinance or other public or private restrictions limiting or defining the uses which may be made of the Property or any part thereof, nor to grant or release any easements, licenses or rights-of-way with respect to the Property, nor to do or permit any other act whereby the Property shall become less valuable, be used for purposes contrary to applicable law or used in any manner which will increase the premium for or result in a termination or cancellation of the insurance policies hereinafter required to be kept and maintained on the Property. In furtherance of, and not by way of limitation upon, the foregoing covenants, Borrower shall effect such repairs as Lender may reasonably require, and from time to time make all needful and proper replacements so that the Appurtenances, Improvements, and fixtures and personal property will, at all times, be in good condition, fit and proper for the respective purposes for which they were originally erected or installed.

(b) Borrower at all times shall maintain the Property in full compliance with all applicable federal, state or municipal laws, ordinances, rules and regulations currently in existence or hereinafter enacted or rendered governing accessibility for the disabled or handicapped including, but not limited to, The Architectural Barriers Act of 1968, The Rehabilitation Act of 1973, The Fair Housing Act of 1988, The Americans with Disabilities Act, The Florida Accessibility Code and The Florida Americans With Disabilities Accessibility Implementation Act, and all regulations and guidelines promulgated under any of the foregoing, as the same may be amended from time to time (collectively, the "Accessibility Laws"). Borrower agrees to indemnify Lender and hold Lender harmless from and against any and all losses, liabilities, damages, injuries, costs, expenses and claims of any and every kind whatsoever paid, incurred or suffered by or asserted against Lender arising, either directly or indirectly, out of any noncompliance of the Property with any Accessibility Laws or any claimed breach or violation thereof by Borrower or the Property, regardless of whether or not caused by, or within the control of Borrower.

Borrower at all times shall keep the Property and ground water of the Property free of Hazardous Materials (as defined below). Borrower shall not and shall not knowingly permit any lessee or any third party requiring the consent of Borrower to enter the Property, to use, generate, manufacture, treat, store, release, threaten release, or dispose of Hazardous Materials in, on or about the Property or the ground water of the Property in violation of any federal, regional, state or local law, decision, statute, rule, ordinance or regulation currently in existence or hereinafter enacted or rendered. Borrower shall give Lender prompt written notice of any claim by any person, entity, or governmental agency that a significant release or disposal of Hazardous Materials has occurred in, on or under the Property in excess of legal limits. Borrower, through its professional engineers or consultants and at its cost, shall promptly and thoroughly investigate suspected contamination of the Property resulting from Hazardous Materials. Borrower shall forthwith remove, repair, clean up, and/or detoxify any Hazardous Materials found on the Property or in the ground water of the Property if such actions are required by Hazardous Waste Laws (as defined below), and whether or not Borrower was responsible for the existence of the Hazardous Materials in, on or about the Property or the ground water of the Property. In addition, Borrower shall not incorporate any underground storage tanks into the Real Property.

"Hazardous Materials" for purposes of this Mortgage shall include, but not be limited to, all toxic or hazardous materials, chemicals, wastes, pollutants or similar substances including, without limitation, Petroleum (as defined below), asbestos insulation and/or urea formaldehyde insulation, which are regulated, governed, restricted or prohibited by any federal, state or local law, decision, statute, rule, regulation or ordinance currently in existence or hereafter enacted or rendered (collectively, the "Hazardous Waste Laws") including, but not limited to, those materials or substances defined as "hazardous substances," "hazardous materials," "toxic substances" or "pollutants" in the Comprehensive Environmental Response, Compensation and Liability Act of 1980, 42 U.S.C. Section 9601, et seq., the Resource Conservation and Recovery Act, 42 U.S.C. Section 6901, et seq., the Hazardous Materials Transportation Act, 49 U.S.C. Section 1801, et seq., the Toxic Substances Control Act, 15 U.S.C. Section 2601 et seq., the Clean Air Act, 42 U.S.C. Section 7401 et seq., the Clean Water Act, 33 U.S.C. Section 1251 et seq., Florida Statutes Chapters 376, 403 and 404, any similar environmental laws of the United States of America or the State of Florida, and any rules and regulations promulgated thereunder, all as presently or hereafter amended. "Petroleum" for purposes of this Mortgage shall include, without limitation, oil or

petroleum of any kind and in any form including, but not limited to, oil, petroleum, fuel oil, oil sludge, oil refuse, oil mixed with other waste, crude oil, gasoline, diesel fuel and kerosene.

Borrower hereby agrees to defend and indemnify Lender and hold Lender harmless from and against any and all losses, liabilities, damages, injuries, costs, expenses and claims of any and every kind whatsoever paid, incurred or suffered by, or asserted against Lender for, with respect to, or as a direct or indirect result of, the presence in, on or under, or the escape, seepage, leakage, spillage, discharge, emission, discharge or release from, the Property of any Hazardous Materials (including, without limitation, any losses, liabilities, damages, fines, injuries, costs, expenses or claims asserted or arising under any Hazardous Waste Laws), regardless of the source of origination and whether or not caused by, or within the control of, Borrower.

(c) Lender, and/or its agents, shall have the right and shall be permitted, but shall not be required, at all reasonable times, to enter upon and inspect the Property to insure compliance with the foregoing covenants and any and all other covenants, agreements and conditions set forth in this Mortgage.

The provisions of this Section 3 and similar provisions in this Mortgage and the other Loan Documents concerning Hazardous Materials shall survive repayment of the Note and satisfaction of this Mortgage or Lender's acquisition of title to the Property by foreclosure of this Mortgage or acceptance of a deed in lieu thereof.

4. Payment of Taxes, Assessments and Other Charges. To pay all and singular such taxes, assessments and other charges as are levied or assessed or that may be hereafter levied or assessed upon or against the Property, when the same shall become due and payable according to law, before the same become delinquent, and before any interest or penalty shall attach thereto, and to deliver official receipts evidencing the payment of the same to Lender not later than thirty (30) days prior to the delinquency. Borrower shall have the right to contest, in good faith, and in accordance with applicable laws and procedures, the proposed assessment of ad valorem taxes or special assessments by governmental authorities having jurisdiction over the Property; provided, however, Borrower shall give written notice thereof to Lender and Lender may, in its sole discretion, require Borrower to post a bond or other collateral satisfactory to Lender in connection with any such action by Borrower.

5. Payment of Liens, Charges and Encumbrances. To immediately pay and discharge from time to time when the same shall become due all lawful claims and demands of contractors, mechanics, materialmen, laborers and others which, if unpaid, might result in, or permit the creation of, a lien, charge or encumbrance upon the Property or any part thereof, or on the rents, issues, income, revenues, profits and proceeds arising therefrom and, in general, to do or cause to be done everything necessary so that the lien of this Mortgage shall be fully preserved at the cost of Borrower, without expense to Lender. Borrower shall have the right to contest, in good faith, and in accordance with applicable laws and procedures, construction liens filed against the Property; provided however, that Borrower shall give written notice thereof to Lender, and Lender may, in its sole discretion, require Borrower to post a bond or other collateral satisfactory to Lender in connection with any such action by Borrower.

6. Payment of Encumbrances. To permit no default or delinquency under any other lien, imposition, charge or encumbrance against the Property, even though junior and inferior to the lien of this Mortgage; provided, however, the foregoing shall not be construed to permit any other lien or encumbrance against the Property.

7. Payment of Mortgage Taxes. To pay any and all taxes which may be levied or assessed directly or indirectly upon the Note and/or this Mortgage (except for income taxes payable by Lender) or the debt secured hereby (including, without limitation, documentary stamp and intangible taxes), without regard to any law which may be hereafter enacted imposing payment of the whole or any part thereof upon Lender, its successors or assigns. Upon violation of this agreement to pay such taxes levied or assessed upon the Note and/or this Mortgage, or upon the rendering by any court of competent jurisdiction of a decision that such an agreement by Borrower is legally inoperative, or if any court of competent jurisdiction shall render a decision that the rate of said tax when added to the rate of interest provided for in the Note exceeds the then maximum rate of interest allowed by law, then, and in any such event, the debt hereby secured shall, at the option of Lender, its successors or assigns, become immediately due and payable, anything contained in this Mortgage or in the Note secured hereby notwithstanding. The additional amounts which may become due and payable hereunder shall be part of the debt secured by this Mortgage.

8. Insurance. Borrower, at its sole cost and expense, shall obtain and maintain during the entire term of this Loan, or cause to be maintained, insurance policies for Borrower and the Property providing at least the coverages set forth in the Loan Agreement.

9. Compliance with Laws. To observe, abide by and comply with all statutes, ordinances, laws, orders, regulations, rules, requirements or decrees relating to the Property enacted, promulgated or issued by any federal, state, county or local governmental authority or any agency or subdivision thereof having jurisdiction over Borrower or the Property, and to observe and comply with all conditions and requirements necessary to preserve and extend any and all rights, licenses, permits (including, but not limited to, zoning, variances, special exceptions and nonconforming uses), privileges, franchises and concessions which are applicable to the Property or which have been granted to or contracted for by Borrower in connection with any existing, presently contemplated or future use of the Property.

10. Maintenance of Permits. To obtain, keep and constantly maintain in full force and effect during the entire term of this Mortgage, all certificates, licenses and permits necessary to keep the Property operating and, except as specifically provided for in this Mortgage, not to assign, transfer or in any manner change such certificates, licenses or permits without first receiving the written consent of Lender.

11. Execution of Additional Documents. To do, execute, acknowledge and deliver all and every such further acts, deeds, conveyances, mortgages, assignments, notices of assignments, transfers, assurances and other instruments, including security agreements and financing statements, as Lender shall from time to time require for the purpose of better assuring, conveying, assigning, transferring and confirming unto Lender the Property and rights hereby encumbered, created, conveyed, assigned or intended now or hereafter so to be encumbered, created, conveyed or assigned or which Borrower may now be or may hereafter become bound to encumber, create, convey, or assign to Lender, or for the purpose of carrying out the intention or facilitating the

performance of the terms of this Mortgage, or for filing, registering or recording this Mortgage, and to pay all filing, registration or recording fees and all taxes, costs and other expenses, including Reasonable Attorneys' Fees, incident to the preparation, execution, acknowledgment, delivery and recordation of any of the same.

12. After-Acquired Property Secured. It is understood and agreed that all right, title and interest of Borrower in and to all extensions, improvements, betterments, renewals, substitutions and replacements of, and all additions and appurtenances to, the Property hereinabove described, hereafter acquired by or released to Borrower, or constructed, assembled or placed by Borrower on the Real Property, and all conversions of the security constituted thereby, immediately upon such acquisition, release, construction, assembling, placement or conversion, as the case may be, and in each such case, without any further mortgage, encumbrance, conveyance, assignment or other act by Borrower, shall become subject to the lien of this Mortgage as fully and completely and with the same effect as though now owned by Borrower and specifically described herein, but at any and all times Borrower will execute and deliver to Lender any and all such further assurances, mortgages, conveyances, or assignments thereof or security interests therein as Lender may reasonably require for the purpose of expressly and specifically subjecting the same to the lien of this Mortgage.

13. Payments by Lender on Behalf of Borrower. Should Borrower fail to make payment of any taxes, assessments or public charges on or with respect to the Property before the same shall become delinquent, or shall fail to make payment of any insurance premiums or other charges, impositions, or liens herein or elsewhere required to be paid by Borrower, then Lender, at its sole option, but without obligation to do so, may make payment or payments of the same and also may redeem the Property from tax sale without any obligation to inquire into the validity of such taxes, assessments and tax sales. In the case of any such payment by Lender, Borrower agrees to reimburse Lender, upon demand therefor, the amount of such payment and of any fees and expenses attendant in making the same, together with interest thereon at the highest rate of interest then allowable by the laws of the State of Florida or, if controlling, the laws of the United States, and until paid such amounts and interest shall be added to and become part of the debt secured hereby to the same extent that this Mortgage secures the repayment of the indebtedness evidenced by the Note. In making payments hereby authorized by the provisions of this Section 13, Lender may do so whenever, in its sole judgment and discretion, such advance or advances are necessary or desirable to protect the full security intended to be afforded by this instrument. Neither the right nor the exercise of the right herein granted unto Lender to make any such payments as aforesaid shall preclude Lender from exercising its option to cause the whole indebtedness secured hereby to become immediately due and payable by reason of Borrower's default in making such payments as hereinabove required.

14. Casualty. If the Property shall be damaged or destroyed, in whole or in part, by fire or other casualty (a "Casualty"), Borrower shall give prompt notice of such damage to Lender and shall promptly commence and diligently prosecute the completion of the restoration of the Property as nearly as possible to the condition the Property was in immediately prior to such Casualty, with such alterations as may be reasonably approved by Lender and otherwise in accordance with this Mortgage. Borrower shall pay all costs of such restoration whether or not such costs are covered by insurance. Lender may but shall not be obligated to make proof of loss if not made promptly

by Borrower. In addition, Lender may participate in any settlement discussions with any insurance companies with respect to any Casualty.

15. Condemnation. Borrower shall promptly give Lender notice of the actual or threatened commencement of any proceeding for the Condemnation of all or any portion of the Property and shall deliver to Lender copies of any and all papers served in connection with such proceedings. Lender may participate in any such proceedings, and Borrower shall from time to time deliver to Lender all instruments requested by it to permit such participation. Borrower shall, at its expense, diligently prosecute any such proceedings, and shall consult with Lender, its attorneys and experts, and cooperate with them in the carrying on or defense of any such proceedings. Notwithstanding any taking by any public or quasi-public authority through Condemnation or otherwise (including, but not limited to, any transfer made in lieu of or in anticipation of the exercise of such taking), Borrower shall continue to pay the indebtedness owed Lender under the Loan Documents at the time and in the manner provided for its payment in the Note and in this Mortgage and the indebtedness shall not be reduced until any award shall have been actually received and applied by Lender, after the deduction of expenses of collection, to the reduction or discharge of the debt. Lender shall not be limited to the interest paid on the award by the condemning authority but shall be entitled to receive out of the award interest at the rate or rates provided herein or in the Note. If the Property or any portion thereof is taken by a condemning authority, Borrower shall promptly commence and diligently prosecute the restoration of the Property. If the Property is sold, through foreclosure or otherwise, prior to the receipt by Lender of the award, Lender shall have the right to receive the award, or a portion thereof sufficient to pay the all of the obligations under this Mortgage, the Note and any of the other Loan Documents.

16. Costs of Collection. In the event that the Note secured hereby is placed in the hands of an attorney for collection, or in the event that Lender shall become a party either as plaintiff or as defendant, in any action, suit, appeal or legal proceeding (including, without limitation, foreclosure, condemnation, bankruptcy or administrative proceedings or any proceeding wherein proof of claim is by law required to be filed), hearing, motion or application before any court or administrative body in relation to the Property or the lien and security interest granted or created hereby or herein, or for the recovery or protection of said indebtedness or the Property, or for the foreclosure of this Mortgage, Borrower shall save and hold Lender harmless from and against any and all costs and expenses incurred by Lender on account thereof, including, but not limited to, Reasonable Attorneys' Fees, title searches and abstract and survey charges, at all trial and appellate levels, and including in administrative, alternative dispute resolution, insolvency and bankruptcy proceedings, and Borrower shall repay, on demand, all such costs and expenses, together with interest thereon at the Default Rate (as defined below); all of which sums, if unpaid, shall be added to and become a part of the indebtedness secured hereby. Without limiting the foregoing, Borrower shall reimburse Lender for any and all out of pocket expenses including, but not limited to, Reasonable Attorneys' Fees, incurred by Lender in reviewing and/or approving any documents requested by Borrower, or otherwise incurred by Lender in exercising its rights pursuant to this Mortgage, the Note, or any of the other Loan Documents. Borrower acknowledges that Lender will charge and Borrower shall pay an administrative fee based upon the amount of time and effort required by Lender's in-house staff to review and approve or disapprove any request made by Borrower; such fee will be determined by Lender at the time a request is made by Borrower and Borrower shall pay such fee before, and as a condition to, Lender's consideration of any request.

Payment of such fee and other expenses incurred by Lender shall not be construed as Lender's approval of such request nor require Lender to approve any request.

17. Default Rate. "Default Rate" shall be defined as any sums not paid when due, whether maturing by lapse of time or by reason of acceleration under the provisions of the Note or this Mortgage, and whether principal, interest or money owing for advancements pursuant to the terms of this Mortgage or any of the other Loan Documents, which shall bear interest until paid at the maximum allowable charges of interest which are permitted to be contracted for, charged or received under the laws of the State of Florida or, if controlling, the United States of America, all of which sums shall be added to and become a part of the indebtedness secured hereby.

18. Savings Clause; Severability. Notwithstanding any provisions in the Note or in this Mortgage to the contrary, the total liability for payments in the nature of interest including default interest and late payment charges shall not exceed the limits imposed by the laws of the State of Florida or, if controlling, the United States of America relating to maximum allowable charges of interest. Lender shall not be entitled to receive, collect or apply, as interest on the indebtedness evidenced by the Note, any amount in excess of the maximum lawful rate of interest permitted to be charged by applicable law. In the event Lender ever receives, collects or applies as interest any such excess, such amount which would be excessive interest shall be applied to reduce the unpaid principal balance of the indebtedness evidenced by the Note. If the unpaid principal balance of such indebtedness has been paid in full, any remaining excess shall be forthwith paid to Borrower. If any clauses or provisions in the Note, this Mortgage, or the other Loan Documents shall operate or would prospectively operate to invalidate this Mortgage, then such clauses or provisions only shall be held for naught, as though not herein contained and the remainder of this Mortgage shall remain operative and in full force and effect.

19. Time is of the Essence. It is understood by Borrower that time is of the essence hereof in connection with all obligations of Borrower herein and in the Note, the Assignment, and in any of the other Loan Documents evidencing or securing the Note.

20. Events of Default; Defaults; Remedies; Acceleration. The occurrence of any one of the following shall constitute an "Event of Default:"

(a) Borrower shall fail to pay to Lender any installment of principal or interest, or both, or any other sum or charge required to be paid by Borrower under this Mortgage, the Note or any Loan Document on or before the due date therefor specified in the applicable Loan Document (subject to any grace periods provided in the applicable Loan Document);

(b) Borrower shall fail to perform, observe or comply with any agreement, covenant or promise made under this Mortgage or under any of the Loan Documents, or other Borrower's obligations, subject to any applicable cure periods;

(c) If any representation or warranty made herein or if any information contained in any financial statement, application, schedule, report or any other document given by Borrower in connection with this Mortgage, with the Note or with any of the Loan Documents is not in all respects true and accurate, or if Borrower omitted to state any material fact or any fact necessary to make such information not misleading;

(d) The occurrence of an Event of Default or other default under the Note or any of the other Loan Documents, or other Borrower's obligations, and the expiration of any applicable grace period;

(e) The occurrence of any default with respect to any indebtedness of Borrower to any person or with respect to any agreement securing any indebtedness of Borrower to any person after expiration of any applicable grace period, but whether or not any required notice has been given;

(f) Borrower shall be or become insolvent (as defined in Section 101 of the United States Bankruptcy Code) or unable to pay their debts as they become due, or admit in writing to such insolvency or to such inability to pay their debts as they become due;

(g) There shall be filed against Borrower an involuntary petition or other pleading seeking the entry of a decree or order for relief under the United States Bankruptcy Code or any similar federal or state insolvency or similar laws ordering: (i) the liquidation of Borrower; or (ii) a reorganization of Borrower or the business and affairs of Borrower; or (iii) the appointment of a receiver, liquidator, assignee, custodian, trustee or similar official for Borrower of the property of Borrower and the failure to have such petition or other pleading denied or dismissed within forty-five (45) calendar days from the date of filing;

(h) The commencement by Borrower of a voluntary case under the federal bankruptcy laws or any federal or state insolvency or similar laws or the consent by Borrower to the appointment of or taking possession by a receiver, liquidator, assignee, trustee, custodian or similar official for Borrower of any of the property of Borrower, or the making by Borrower of an assignment for the benefit of creditors, or the failure by Borrower generally to pay the debts of Borrower as the debts become due;

(i) The dissolution, merger, consolidation or reorganization of, or the entry of any order, judgment or decree for the dissolution, merger, consolidation or reorganization of, Borrower that is not a natural person;

(j) The entry of any judgment, order, award or decree against Borrower and a determination by Lender, in Lender's reasonable good faith discretion, that the same when aggregated with all other judgments, orders, awards and decrees outstanding against Borrower, could have a material adverse effect on the prospect for Lender to fully and punctually realize full payment to Lender of the indebtedness represented by the Note;

(k) The injunction or restraint of Borrower in any manner from conducting their business, in whole or in part, and a determination by Lender, in good faith but in its sole discretion, that the same could have a material adverse effect on the prospect for Lender to fully and punctually realize the full benefits conferred on Lender by this Mortgage;

(l) Any assets of Borrower shall be attached, levied upon, seized or repossessed, or come into the possession of a trustee, receiver or other custodian that, as determined by Lender in the exercise of reasonable, good faith discretion, would reasonably be expected to have a material adverse effect on the prospect for Lender to fully and punctually realize full payment and performance of the Borrower's obligations;

(m) The determination in good faith by Lender that a material adverse change has occurred in the financial condition of Borrower from the condition set forth in the most recent financial statements heretofore furnished to Lender, or from the financial condition as heretofore most recently disclosed to Lender, that would reasonably be expected to have a material adverse effect on the prospect for Lender to fully and punctually realize full payment and performance of the Borrower's obligations;

(n) The determination in good faith by Lender that any security for Borrower's obligations is inadequate, which deficiency is not remedied to the reasonable satisfaction of Lender within thirty (30) days after written notice of such deficiency given to Borrower;

(o) The determination in good faith by Lender that the prospect of payment of any of Borrower's obligations is materially impaired or otherwise have material adverse effect on the prospect for Lender to fully and punctually realize full payment and performance of the Borrower's obligations; or

(p) If and to the extent an Event of Default exists and is continuing, one hundred and eighty (180) days following the death of Borrower who is a natural person if a substitute guarantor reasonably acceptable to the Lender has not executed a guaranty agreement substantially identical to this Mortgage.

(q) Any lien for labor, materials or taxes (except for ad valorem taxes not yet due and payable) or otherwise shall be filed against the Property and not be released (by payment, bonding or otherwise) within sixty (60) days after Borrower receives actual notice thereof, and that are not being contested;

(r) The death of the Guarantor (as used here and anywhere else in this Mortgage such capitalized terms shall have the meaning as defined in the Loan Agreement) shall be considered an Event of Default. However, Lender will forebear for one hundred eighty (180) days from the Event of Default during which time Borrower shall be permitted to provide a substitute guarantor(s) of substantially similar net worth and ability which must be acceptable to Lender in its reasonable discretion; or

(s) Other Default. Borrower shall breach or fail to perform, observe or meet any other non-monetary covenant or condition made in this Mortgage not covered by the foregoing.

21. Remedies of Lender. Upon an Event of Default, Lender, at its sole option and in addition to and not in lieu of the remedies provided for in the Business Loan Agreement and other Loan Documents, may thereupon or thereafter declare the indebtedness evidenced by the Note, as well as all other monies secured hereby including, without limitation, any late payment charges, to be forthwith due and payable, whereupon the principal of and the interest accrued on the indebtedness evidenced by the Note and all other sums secured by this Mortgage, at the option of Lender, shall immediately become due and payable as if all of said sums of money were originally stipulated to be paid on such day, and thereupon, Lender may avail itself of all rights and remedies provided by law and may foreclose or prosecute a suit at law or in equity as if all monies secured

hereby had matured prior to its institution, anything in this Mortgage or in the Note to the contrary notwithstanding.

In addition to all other remedies at law and in equity, Lender may institute an action to foreclose this Mortgage as to the amount so declared due and payable, and thereupon, the Property shall be sold according to law to satisfy and pay the same, together with all costs, expenses and allowances thereof including, without limitation, Reasonable Attorneys' Fees for Lender's attorneys. The Property may be sold in one parcel, several parcels or groups of parcels, and Lender shall be entitled to bid at the sale, and, if Lender is the highest bidder for the Property or any part or parts thereof, Lender shall be entitled to purchase the same. The failure or omission on the part of Lender to exercise the option for acceleration of maturity of the Note and foreclosure of this Mortgage following any default as aforesaid or to exercise any other option, right or remedy granted hereunder to Lender when entitled to do so in any one or more instances, or the acceptance by Lender of partial payment of the indebtedness secured hereby, whether before or subsequent to Borrower's default hereunder, shall not constitute a waiver of any such default or the right to exercise any such option, right or remedy, but such option, right or remedy shall remain continuously in force. Acceleration of maturity of the Note, once claimed hereunder by Lender, at the option of Lender, may be rescinded by written acknowledgment to that effect by Lender, but the tender and acceptance of partial payments alone shall not in any way affect or rescind such acceleration of maturity.

22. Protection of Lender's Security. At any time after default hereunder, Lender is authorized, without notice and in its sole discretion, to enter upon and take possession of the Property or any part thereof and to perform any acts which Lender deems necessary or proper to protect and conserve the security herein intended to be provided by the Property and, in accordance with the Assignment, to collect and receive all rents, issues and profits thereof and therefrom, including those past due as well as those accruing thereafter.

23. Appointment of Receiver. If, at any time after a default hereunder, Lender determines in its sole discretion, that a receiver is necessary to protect the Property or its rents, issues, revenue, profits or proceeds, whether before or after maturity of the indebtedness secured hereby and whether before or at the time of or after the institution of suit to collect such indebtedness or to enforce this Mortgage, Lender, as a matter of strict right and regardless of the value of the Property or the amounts due hereunder or secured hereby, or of the solvency of any party bound for the payment of such indebtedness, shall have the right, upon ex parte application and without notice to anyone, and by any court having jurisdiction, to the appointment of a receiver to take charge of, manage, preserve, protect and operate the Property, to collect the rents, issues, revenues, profits, proceeds and income thereof, to make all necessary and needful repairs, to pay all taxes, assessments and charges against the Property and all premiums for insurance thereon, and to do such other acts as may by such court be authorized and directed, and after payment of the expenses of the receivership and the management of the Property, to apply the net proceeds of such receivership in reduction of the indebtedness secured hereby or in such other manner as the said court shall direct, notwithstanding the fact that the amount owing thereon may not then be due and payable or the said indebtedness may otherwise be adequately secured. Such receivership shall, at the option of Lender, continue until full payment of all sums hereby secured or until title to the Property shall have passed by sale under this Mortgage. Borrower hereby specifically waives its right to object to the appointment of a receiver as aforesaid and hereby expressly agrees

that such appointment shall be made as an admitted equity and as a matter of absolute right to Lender.

24. Rights and Remedies Cumulative; Forbearance Not a Waiver. The rights and remedies herein provided are cumulative and Lender, as the holder of the Note and of every other obligation secured hereby, may recover judgment thereon, issue execution therefor and resort to every other right or remedy available at law or in equity, without first exhausting any right or remedy available to Lender and without affecting or impairing the security of any right or remedy afforded hereby, and no enumeration of special rights or powers by any provisions hereof shall be construed to limit any grant of general rights or powers, or to take away or limit any and all rights granted to or vested in Lender by law, and Borrower further agrees that no delay or omission on the part of Lender to exercise any rights or powers accruing to it hereunder shall impair any such right or power or shall be construed to be a waiver of any such event of default hereunder or an acquiescence therein; and every right, power and remedy granted herein or by law to Lender may be exercised from time to time as often as may be deemed expedient by Lender.

25. Modification Not an Impairment of Security. Lender, without notice and without regard to the consideration, if any, paid therefor, may release any part of the security described herein or may release any person or entity liable for any indebtedness secured hereby without in any way affecting the priority of this Mortgage, to the full extent of the indebtedness remaining unpaid hereunder, upon any part of the security not expressly released. Lender may, at its option and within its sole discretion, also agree with any party obligated on said indebtedness, or having any interest in the security described herein, to extend the time for payment of any part or all of the indebtedness secured hereby, and such agreement shall not, in any way, release or impair this Mortgage, but shall extend the same as against the title of all parties having any interest in said security, which interest is subject to this Mortgage.

26. Modification Not a Waiver. In the event Lender: (a) releases, as aforesaid, any part of the security described herein or any person or entity liable for any indebtedness secured hereby; (b) grants an extension of time for the payment of the Note; (c) takes other or additional security for the payment of the Note; or (d) waives or fails to exercise any rights granted herein or in the Note, or any of the other Loan Documents, any said act or omission shall not release Borrower, subsequent purchasers of the Property or any part thereof, or makers, sureties, or endorsers of the Note, if any, from any obligation or any covenant of this Mortgage or of the Note or of any of the other Loan Documents, nor preclude Lender from exercising any right, power or privilege herein granted or intended to be granted in the event of any other default then made, or any subsequent default.

27. Transfer of Property or Beneficial Interest in Borrower; Assumption. Except as specifically stated herein below, the sale, transfer, assignment or conveyance of all or any portion of the Property or the transfer, assignment or conveyance of any direct or indirect interest in Borrower, whether voluntarily or by operation of law, in each case without the prior written consent of Lender, shall constitute a default under the terms of this Mortgage and entitle Lender, at its sole option, to accelerate all sums due on the Note, together with late payment charges, or any other amounts secured hereby.

Borrower and any subsequent owner of the Property or any portion thereof shall do all things necessary to preserve and keep in full force and effect its and their existence, franchises, rights and privileges as an entity created or organized under the laws of the state of its formation and its right to own property and transact business in the State of Florida, as applicable. It shall be a default hereunder if Borrower or any subsequent owner of the Property or any portion thereof shall amend, modify, transfer, assign or cancel the certificate of incorporation, bylaws, partnership agreement, certificate of partnership, articles of organization, operating agreement, trust agreement, or other organizational documents (collectively, the "Organizational Documents") as the case may be, of Borrower or such subsequent owner and, in the reasonable determination of Lender, such amendment, modification, transfer, assignment or cancellation could have a material adverse effect on Lender, the Property or the value thereof. Borrower or such subsequent owner shall provide Lender with copies of any amendment to its Organizational Documents no later than thirty (30) days prior to the effective date of such amendment so that Lender may, in its sole discretion, determine whether such amendment adversely affects Lender, the Property or the value thereof.

In the event the ownership of the Property, or any part thereof, shall become vested in a person or entity other than Borrower, whether with or without the prior written consent of Lender, Lender may, without notice to Borrower, deal with such successor or successors in interest with reference to the Property, this Mortgage and the Note secured hereby in the same manner and to the same extent as with Borrower without in any way vitiating or discharging Borrower's liability hereunder, under the Note or under any of the Loan Documents. No sale, transfer or conveyance of the Property, no forbearance on the part of Lender and no extension of the time for the payment of the Note hereby secured given by Lender to Borrower shall operate to release, discharge, modify, change, or affect the original liability of Borrower, either in whole or in part, unless expressly set forth in writing executed by Lender. Notwithstanding anything contained herein to the contrary, Borrower hereby waives any right it now has or may hereafter have to require Lender to prove an impairment of its security as a condition to Lender's exercise of its rights hereunder.

28. Further Encumbrances; No Structural Alterations.

(a) Borrower shall not make, suffer, or permit the further encumbrance of all or any part of the Property or any interest therein without the prior written consent of Lender, and any such encumbrance made without Lender's prior written consent shall be void and shall constitute a default hereunder. If any person or entity should obtain an interest in all or any part of the Property pursuant to the execution or enforcement of any lien, security interest, or other right, whether superior, equal or subordinate to this Mortgage or the lien hereof, such event shall be deemed to be an unpermitted transfer by Borrower and an event of default.

(b) Borrower shall not make, suffer or permit, without the prior written consent of Lender, any structural alterations of, or addition to, the Improvements now or hereafter situated on the Real Property, or the addition of any new buildings or other structures thereon.

29. Conveyance of Mineral Rights Prohibited. Borrower agrees that the making of any oil, gas or mineral lease or the sale or conveyance of any mineral interest or right to explore for minerals under, through or upon the Property would impair the value of the Property securing the Note, and that Borrower shall have no right, power or authority to lease the Property, or any part

thereof, for oil, gas or other mineral purposes, or to grant, assign or convey any mineral interest of any nature, or the right to explore for oil, gas and other minerals, without first obtaining Lender's express written permission therefor, which permission shall not be valid until recorded among the public records of Escambia County, Florida. Borrower further agrees that if Borrower shall make, execute, or enter into any such lease or attempt to grant any such mineral rights without such prior written permission of Lender, then Lender shall have the option, without notice, to declare the same to be a default under this Mortgage and to declare the indebtedness hereby secured immediately due and payable in full. Whether or not Lender shall consent to such lease or grant of mineral rights, Lender shall receive the entire consideration to be paid for any such lease or grant of mineral rights, with the same to be applied to the indebtedness hereby secured, notwithstanding the fact that the amount owing thereon may not be due and payable or that the said indebtedness may be otherwise adequately secured; provided, however, that the acceptance of such consideration shall in no way impair the lien of this Mortgage on the Property or cure any existing Monetary Default.

30. Estoppel Certification by Borrower. Borrower, upon request of Lender therefor made either personally or by mail, shall certify in writing to Lender (or any party designated by Lender) in form satisfactory to Lender the amount of principal and interest then outstanding under the terms of the Note and any other sums owing on account of this Mortgage or the other Loan Documents, and whether any offsets or defenses exist against the indebtedness secured by this Mortgage. Such certifications shall be made by Borrower within ten (10) days following written notice of the request.

31. Cross-Default. The Note secured hereby is also secured by the terms, conditions and provisions of an Assignment of Leases, Rents and Profits from Borrower to Lender recorded among the public records of Escambia County, Florida, and may be secured by contracts or agreements of guaranty or other security instruments from Borrower or others to Lender. The terms, conditions and provisions of each such security instrument shall be considered a part hereof as fully as if set forth herein verbatim. Any default under this Mortgage, the Note or any of the other Loan Documents shall constitute an event of default under each of the other Loan Documents, and any default under any of the other Loan Documents shall likewise constitute a default hereunder and under the Note secured hereby. Notwithstanding the foregoing, the enforcement or attempted enforcement of this Mortgage or any other security instrument now or hereafter held by Lender shall not prejudice or in any manner affect the right of Lender to enforce any of the other Loan Documents; it being understood and agreed that Lender shall be entitled to enforce this Mortgage and any of the other Loan Documents now or hereafter held by it in such order and manner as Lender, in its sole discretion, shall determine.

32. Examination of Borrower's Books; Financial Reporting. Borrower shall keep and maintain or will cause to be kept and maintained proper and accurate books and records, in accordance with generally accepted accounting principles, reflecting the financial affairs of Borrower and all items of income and expense in connection with the operation of the Property, as more fully set forth in the Loan Agreement.

33. Future Advances Secured. This Mortgage shall secure not only existing indebtedness, but also future advances, whether such advances are obligatory or to be made at the option of Lender, as are made within twenty (20) years from the date hereof. Upon request of

Borrower, and at Lender's option prior to release of this Mortgage, Lender may make future advances to Borrower. All future advances with interest thereon shall be secured by this Mortgage to the same extent as if such future advances were made on the date of the execution of this Mortgage unless the parties shall agree otherwise in writing, but the total secured indebtedness shall not exceed at any one time a maximum principal amount equal to double the face amount of the Note. Any advances or disbursements made for the benefit or protection of or the payment of taxes, assessments, levies or insurance upon the Property, with interest on such disbursements as provided herein shall be added to the principal balance of the Note and collected as part thereof. The filing of any notice purporting to limit the maximum amount that may be secured by this Mortgage pursuant to Section 697.04, Fla. Stat., or otherwise shall be ineffective and shall constitute a default under this Mortgage.

34. Effect of Security Agreement. Borrower does hereby grant and this Mortgage is and shall be deemed to create, grant, give and convey a mortgage of, a lien and encumbrance upon, and a present security interest in both real and personal property, including all insurance proceeds, condemnation awards, and rent proceeds, hereinabove particularly or generally described and conveyed, whether now or hereafter necessary for or used or useful, either directly or indirectly, in connection with the use or operation of the Property, and this Mortgage shall also serve as a "security agreement" within the meaning of that term as used in the Uniform Commercial Code as adopted and in force from time to time in the State of Florida, and shall be operative and effective as a security agreement in addition to, and not in substitution for, any other security agreement executed by Borrower in connection with the Note secured hereby. Borrower agrees to and shall, upon the request of Lender, execute and deliver to Lender, in form and content satisfactory to Lender, such financing statements, descriptions of property and such further assurances as Lender, in its sole discretion, may from time to time consider necessary to create, perfect, continue and preserve the lien and encumbrances hereof and the security interest granted herein upon and in such real and personal property described herein, including all insurance proceeds, condemnation awards, and rent proceeds described and intended to be the subject of the security interest, lien and encumbrance hereby created, granted and conveyed. Without the prior written consent of Lender, Borrower shall not create or suffer to be created, pursuant to the Uniform Commercial Code, any other security interest in such real and personal property described herein. Upon the occurrence of a default hereunder or Borrower's breach of any other covenants or agreements between the parties entered into in conjunction herewith, Lender shall have the remedies of a secured party under the Uniform Commercial Code and, at Lender's option, the remedies provided for in this Mortgage. Lender, at the expense of Borrower, may or shall cause such statements, descriptions and assurances, as herein provided in this Section 35, and this Mortgage to be recorded and re-recorded, filed and refiled, at such times and in such places as may be required or permitted by law to so create, perfect and preserve the lien and encumbrance hereof upon all of the Property, and Borrower hereby authorizes Lender to file financing statements and amendments thereto without the signature of Borrower, as permitted by law.

35. Embargoed Person. At all times throughout the term of the Loan, (a) none of the funds or assets that are used to repay the Loan of Borrower or otherwise shall constitute property of, or shall be beneficially owned directly or, to Borrower's best knowledge, indirectly, by any person subject to sanctions or trade restrictions under United States law ("Embargoed Person" or "Embargoed Persons") that are identified on (1) the "List of Specially Designated Nationals and Blocked Persons" maintained by the Office of Foreign Assets Control (OFAC), U.S. Department

of the Treasury, and/or to Borrower's best knowledge, as of the date thereof, based upon reasonable inquiry by Borrower, on any other similar list maintained by OFAC pursuant to any authorizing statute including, but not limited to, the International Emergency Economic Powers Act, 50 U.S.C. Section 1701 et seq., The Trading with the Enemy Act, 50 U.S.C. Section 4301 et seq., and any Executive Order or regulation promulgated thereunder, with the result that the investment in Borrower, as applicable (whether directly or indirectly), is prohibited by law, or the Loan made by Lender would be in violation of law, or (2) Executive Order 13224 (September 23, 2001) issued by the President of the United States ("Executive Order Blocking Mortgaged Property and Prohibiting Transactions with Persons Who Commit, Threaten to Commit, or Support Terrorism"), any related enabling legislation or any other similar Executive Orders, and (b) no Embargoed Person shall have any direct interest, and to Borrower's best knowledge, as of the date hereof, based upon reasonable inquiry by Borrower, indirect interest, of any nature whatsoever in Borrower, with the result that the investment in Borrower (whether directly or indirectly), is prohibited by law or the Loan is in violation of law.

36. Anti-Money Laundering. At all times throughout the term of the Loan, including after giving effect to any transfers permitted pursuant to the Loan Documents, none of the funds of Borrower that are used to repay the Loan shall be derived from any unlawful activity, with the result that the investment in Borrower (whether directly or indirectly), is prohibited by law or the Loan is in violation of law.

37. Successors and Assigns; Terminology. The provisions hereof shall be binding upon Borrower, and the successors and assigns of Borrower, and shall inure to the benefit of Lender, its successors and assigns. Where more than one Borrower is named herein, the obligations and liabilities of Borrower shall be joint and several. Wherever used in this Mortgage, unless the context clearly indicates a contrary intent or unless otherwise specifically provided herein, the word "Borrower" shall mean Borrower and/or any subsequent owner or owners of the Property, the word "Lender" shall mean Lender or any subsequent holder or holders of the Note and this Mortgage, the word "Note" shall mean the note(s) secured by this Mortgage, the word "person" shall mean an individual, trustee, trust, corporation, partnership, limited liability company, unincorporated association, or other entity, and the phrase "successors and assigns" includes the personal representatives and heirs of any individual. As used herein, the phrase "Reasonable Attorneys' Fees" shall mean all costs and expenses of attorneys selected by Lender based upon such attorneys' then prevailing hourly rates as opposed to any statutory presumption specified by any statute then in effect in the State of Florida including, without limitation, all reasonable attorneys' fees and costs incurred in finalizing a judgment and in establishing the amount of reasonable fees and costs to be awarded.

38. Notices. All notices, reports, requests or other written instruments required or permitted hereunder shall be in writing, signed by the party giving or making the same, and shall be sent hand-delivered, effective upon receipt, sent by a nationally recognized overnight courier, effective upon receipt, or sent by United States registered or certified mail, postage prepaid, with return receipt requested, deemed effective on the earlier of the day of actual delivery as shown by the addressee's return receipt or the expiration of three (3) business days after the date of mailing, addressed to the party intended to receive the same at the address set forth below (or at such other address as shall be given in writing by any party to another):

| | |
|---|---|
| If to Borrower: | Black Knight Investments, L.L.C.<br>1601 Hackberry Lane<br>Tuscaloosa, AL 35401<br>Attention: Michael Musgrove |
| If to Lender: | Robertson Banking Company<br>1400 Greensboro Avenue<br>Tuscaloosa, AL 35401<br>Attention: Joey Heurion |

39. Governing Law. This Mortgage is to be governed by the internal laws of the State of Florida (without regard to its principles and provisions on conflicts of laws), provided that where collateral is located in a jurisdiction other than Florida, remedies available to Lender hereunder and under the laws of such jurisdiction shall be available to Lender without regard to any restriction of Florida law. If any provision of this Mortgage shall be held to be legally invalid or unenforceable by any court of competent jurisdiction, all remaining provisions of this Mortgage shall remain in full force and effect.

40. Rights of Lender Cumulative. The rights of Lender arising under the clauses and covenants contained in this Mortgage shall be separate, distinct and cumulative and none of them shall be in exclusion of the others; and no act of Lender shall be construed as an election to proceed under any one provision herein to the exclusion of any other provisions, anything herein or otherwise to the contrary notwithstanding.

41. Modifications. This Mortgage cannot be changed, altered, amended or modified except by an agreement in writing executed by both Borrower and Lender.

42. Captions. The captions set forth at the beginning of the various paragraphs of this Mortgage are for convenience only and shall not be used to interpret or construe the provisions of this Mortgage.

43. Waiver of Redemption, and Marshalling of Assets. To the fullest extent permitted by law, Borrower hereby irrevocably and unconditionally waives and releases (a) all benefit that might accrue to Borrower by virtue of any present or future statute of limitations or law or judicial decision exempting the Property from attachment, levy or sale on execution or providing for any stay of execution, exemption from civil process, redemption or extension of time for payment, and (b) any right to a marshalling of assets or a sale in inverse order of alienation.

44. Consent to Jurisdiction. Borrower hereby consents and submits to the exclusive jurisdiction and venue of any state or federal court sitting in the county and state where the Real Property is located with respect to any legal action or proceeding arising with respect to this Mortgage or any other Loan Document and waives all objections which it may have to such jurisdiction and venue. Nothing herein shall, however, preclude or prevent Lender from bringing actions against Borrower in any other jurisdiction as may be necessary to enforce or realize upon the security herein provided.

45. Counterparts. This Mortgage may be executed in any number of counterparts, each of which when so executed and delivered shall be an original, but all of which shall together constitute one and the same instrument.

46. WAIVER OF TRIAL BY JURY. BORROWER HEREBY KNOWINGLY, VOLUNTARILY AND INTENTIONALLY WAIVES THE RIGHT BORROWER MAY HAVE TO A TRIAL BY JURY IN RESPECT OF ANY LITIGATION BASED HEREON, OR ARISING OUT OF, UNDER OR IN CONNECTION WITH THIS MORTGAGE, OR ANY COURSE OF CONDUCT, COURSE OF DEALING, STATEMENTS (WHETHER VERBAL OR WRITTEN) OR ACTIONS OF BORROWER. THIS PROVISION IS A MATERIAL INDUCEMENT FOR LENDER EXTENDING CREDIT TO BORROWER. FURTHER, BORROWER HEREBY CERTIFIES THAT NO REPRESENTATIVE OR AGENT OF LENDER, NOR LENDER'S COUNSEL, HAS REPRESENTED, EXPRESSLY OR OTHERWISE, THAT LENDER WOULD NOT, IN THE EVENT OF SUCH LITIGATION, SEEK TO ENFORCE THIS WAIVER OF RIGHT TO JURY TRIAL PROVISION.

(end of text; signature on following page)

THIS IS A BALLOON MORTGAGE AND THE FINAL PRINCIPAL BALANCE, TOGETHER WITH ACCRUED INTEREST, IF ANY, AND ALL ADVANCEMENTS MADE BY THE MORTGAGEE UNDER THE TERMS OF THIS MORTGAGE, SHALL BE DUE UPON MATURITY.

IN WITNESS WHEREOF, Borrower has caused this Mortgage to be executed as of the day and year first above written.

**BORROWER:**

BLACK KNIGHT INVESTMENTS, L.L.C.,
an Alabama limited liability company

By: Michael Musgrove
Its: Sole Member

STATE OF FLORIDA
COUNTY OF ESCAMBIA

The foregoing instrument was acknowledged before me by means of ☑ physical presence or ☐ online notarization, this 10th day of June, 2025, by Michael Musgrove, sole member of Black Knight Investments, L.L.C., an Alabama Limited Liability Company, on behalf of the company.

NOTARY PUBLIC

☐ Personally Known
or
☑ Produced Identification
Type of Identification Produced AL DL

ANDREA BENNETT
NOTARY PUBLIC
MY COMMISSION EXPIRES 3-7-2029
STATE OF FLORIDA
COMMISSION NUMBER HH 647489

# EXHIBIT "A"

The Land referred to herein below is situated in an Unincorporated Area in the County of ESCAMBIA, State of Florida, and is described as follows:

COMMENCE AT THE NORTHWEST CORNER OF LOT 1, BEING THE NORTHEAST CORNER OF LOT 205, HYER PLACE, A SUBDIVISION OF A PORTION OF SECTIONS 8 AND 9, TOWNSHIP 2 SOUTH, RANGE 30 WEST, AS RECORDED IN PLAT BOOK 1 AT PAGE 92, OF THE PUBLIC RECORDS OF ESCAMBIA COUNTY, FLORIDA; THENCE SOUTH 01 DEGREES 37 MINUTES 30 SECONDS WEST ALONG THE WEST LINE OF SAID LOT 1 (EAST LINE OF LOT 205) FOR A DISTANCE OF 25.00 FEET; THENCE SOUTH 88 DEGREES 30 MINUTES 00 SECONDS EAST FOR A DISTANCE OF 50.00 FEET TO THE EAST RIGHT OF WAY LINE OF "L" STREET (50' R/W); THENCE SOUTH 01 DEGREES 37 MINUTES 30 SECONDS WEST ALONG SAID EAST RIGHT OF WAY LINE FOR A DISTANCE OF 623.57 FEET TO THE POINT OF BEGINNING; THENCE CONTINUE SOUTH 01 DEGREES 37 MINUTES 30 SECONDS WEST ALONG SAID EAST RIGHT OF WAY LINE FOR A DISTANCE OF 192.60 FEET; THENCE SOUTH 88 DEGREES 30 MINUTES 00 SECONDS EAST FOR A DISTANCE OF 165.00 FEET; THENCE NORTH 01 DEGREES 37 MINUTES 30 SECONDS EAST FOR A DISTANCE OF 192.60 FEET; THENCE NORTH 88 DEGREES 30 MINUTES 00 SECONDS WEST FOR A DISTANCE OF 165.00 FEET TO THE POINT OF BEGINNING.

TOGETHER WITH EASEMENT FOR INGRESS AND EGRESS OVER:

THAT PORTION OF LOT 1 SECTION 8, TOWNSHIP 2 SOUTH, RANGE 30 WEST, ESCAMBIA COUNTY, FLORIDA, DESCRIBED AS FOLLOWS: COMMENCE AT THE NORTHWEST CORNER OF SAID LOT 1, BEING THE NORTHEAST CORNER OF LOT 205, HYER PLACE, A SUBDIVISION OF A PORTION OF SECTIONS 8 AND 9, TOWNSHIP 2 SOUTH, RANGE 30 WEST, AS RECORDED IN PLAT BOOK 1 AT PAGE 92, OF THE PUBLIC RECORDS OF SAID COUNTY; THENCE SOUTH 01 DEGREES 37 MINUTES 30 SECONDS WEST ALONG THE WEST LINE OF SAID LOT 1, (EAST LINE OF LOT 205) FOR A DISTANCE OF 25.00 FEET; THENCE SOUTH 88 DEGREES 30 MINUTES 00 SECONDS EAST FOR A DISTANCE OF 50.00 FEET TO THE EAST RIGHT OF WAY LINE OF "L" STREET (50' R/W); THENCE SOUTH 01 DEGREES 37 MINUTES 30 SECONDS WEST ALONG SAID EAST RIGHT OF WAY LINE FOR A DISTANCE OF 816.17 FEET TO THE POINT OF BEGINNING; THENCE CONTINUE SOUTH 01 DEGREES 37 MINUTES 30 SECONDS WEST ALONG THE EAST RIGHT OF WAY LINE FOR A DISTANCE OF 20.00 FEET; THENCE SOUTH 88 DEGREES 30 MINUTES 00 SECONDS EAST FOR A DISTANCE OF 350.00 FEET; THENCE NORTH 01 DEGREES 37 MINUTES 30 SECONDS EAST FOR A DISTANCE OF 20.00 FEET; THENCE NORTH 88 DEGREES 30 MINUTES 00 SECONDS WEST FOR A DISTANCE OF 350.00 FEET TO THE POINT OF BEGINNING.

**Recorded in Public Records 6/17/2025 3:25 PM OR Book 9335 Page 400, Instrument #2025045615, Pam Childers Clerk of the Circuit Court Escambia County, FL Recording $78.00**

Prepared by and return to:
Stephen R. Moorhead, Esquire
Moorhead Real Estate Law Group
127 Palafox Place, Suite 200
Pensacola, FL 32502
Matter ID 25-1155

# ASSIGNMENT OF LEASES, RENTS AND PROFITS

THIS ASSIGNMENT OF LEASES, RENTS AND PROFITS (the "Assignment") is made, executed and delivered as of the 6th day of June, 2025, by BLACK KNIGHT INVESTMENTS, L.L.C., an Alabama limited liability company, having an address at 1601 Hackberry Lane, Tuscaloosa, AL 35401 ("Borrower") to and in favor of ROBERTSON BANKING COMPANY, having an office at 1400 Greensboro Avenue, Tuscaloosa, AL 35401 ("Lender").

**WITNESSETH:**

WHEREAS, Borrower is justly indebted to Lender in the original principal sum of THREE HUNDRED FORTY THOUSAND AND 00/100 DOLLARS ($340,000.00) with interest thereon, which indebtedness is evidenced by that certain Promissory Note of even date herewith in such amount made by Borrower in favor of Lender (together with all amendments thereto and all other notes given in substitution, modification, increase, renewal or extension thereof, in whole or in part, hereinafter referred to as the "Note");

WHEREAS, Lender, as a condition precedent to the extension of credit and the making of the loan evidenced by the Note (the "Loan"), has required that Borrower provide Lender with security for the repayment of the indebtedness evidenced by the Note, as well as for the performance, observance and discharge by Borrower of the covenants, conditions and agreements made by Borrower to, with, in favor of and for the benefit of Lender with respect to said indebtedness and such security; and

WHEREAS, Borrower is the present owner in fee simple of that certain parcel of real property located in Escambia County, Florida, being more particularly described as follows (the "Property"):

SEE EXHIBIT "A" ATTACHED HERETO
AND INCORPORATED HEREIN BY REFERENCE

NOW, THEREFORE, in consideration of and in order to secure the repayment of the indebtedness evidenced by the Note, together with interest on such indebtedness, as well as the payment of all other sums of money secured hereby, as hereinafter provided, and also to secure the observance, performance and discharge by Borrower of all covenants, conditions and agreements set forth in the Note, this Assignment and in all other documents and instruments executed and delivered by Borrower to and in favor of Lender for the purpose of further securing the repayment of the indebtedness evidenced and represented by the Note, and in order to charge the properties, interests and rights hereinafter described with such payment, observance, performance and discharge, and for other good and valuable considerations, the receipt and

sufficiency of which are hereby acknowledged, Borrower does hereby grant, bargain, sell, alien, remise, release, convey, assign, transfer, pledge, deliver, set over, hypothecate, warrant and confirm unto Lender, its successors and assigns forever, all of Borrower's right, title and interest in and to all leases, rents, issues, profits and income of, from or pertaining to the Property (sometimes referred to herein as "Rents"), as well as any future or additional leases or rental agreements, and any renewals or extensions of the same that may be entered into by Borrower, together with all security deposits paid or payable by any tenants under all present or future leases or rental agreements and any fees that permit tenants to terminate their leases, which are payable to Borrower under the terms and conditions of any of said leases. Borrower hereby agrees to execute and deliver such further assignments of said leases or rental agreements as Lender may from time to time require.

This Assignment is absolute and effective immediately and without possession. IT IS THE INTENTION OF BORROWER AND LENDER THAT THE FOREGOING ASSIGNMENT ESTABLISHES A PRESENT AND ABSOLUTE TRANSFER AND ASSIGNMENT TO LENDER OF ALL LEASES AND RENTS RELATING TO THE REAL PROPERTY (AND ALL GUARANTIES THEREOF). This Assignment is an absolute assignment to Lender and not an assignment as security for the performance by Borrower of the obligations under the Loan Documents (as defined below), or any other indebtedness. Borrower acknowledges that this Assignment and the Mortgage, individually and collectively, are intended to give Lender the benefit of Section 214 of the Bankruptcy Reform Act of 1994 and the provisions of the United States Bankruptcy Code referenced therein, as the same may hereafter be amended from time to time.

PROVIDED ALWAYS, however, that if Borrower shall pay unto Lender the indebtedness evidenced by the Note, and if Borrower shall duly, promptly and fully perform, discharge, execute, effect, complete, comply with and abide by each of the terms, covenants and conditions of the Loan Documents then this Assignment and the estates and interests hereby granted and created shall terminate.

1. Payment of Principal and Interest. Borrower shall pay the principal of the indebtedness evidenced by the Note, together with all interest thereon, in accordance with the terms of the Note, promptly at the times, at the place and in the manner that said principal and interest shall become due, and to promptly and punctually pay all other sums required to be paid by Borrower pursuant to the terms of the Note, the Loan Agreement, the Mortgage and Security Agreement, the Security Agreement, this Assignment and all other documents and instruments executed as further evidence of, as additional security for or in connection with the indebtedness evidenced by the Note and secured by the aforementioned loan documents (collectively, the "Loan Documents").

2. Performance of Other Obligations. To perform, comply with and abide by each and every one of the covenants, agreements and conditions contained and set forth in the regulations and orders of any governmental authorities having jurisdiction over the Property which now or hereafter affect the Property or requires any alterations or improvements to be made thereon, and perform all of its obligations under any covenant, condition, restriction or agreement affecting the Property and to insure that at all times the Property constitutes one or more legal lots

capable of being conveyed without violation of any applicable subdivision or platting laws, ordinances, rules or regulations, or other laws relating to the division or separation of real property.

3. Representations and Warranties of Borrower. In furtherance of the foregoing assignment, Borrower:

(a) Represents and warrants that it is the owner in fee simple of the Property and has good title to the leases, rents, income, issues, profits and security deposits hereby assigned and good right to assign the same, and that no other person, entity, firm or corporation has any right, title or interest therein; that Borrower has not previously sold, assigned, transferred, mortgaged or pledged said leases, rents, issues, profits and income of the Property; and that payment of any of the same has not otherwise been anticipated, waived, released, discounted, set off or otherwise discharged or compromised.

(b) Agrees and warrants that no request will be made of any tenant to pay any rent, and no rent will be accepted by Borrower, for more than one (1) month in advance of the date such rent becomes due and payable under the terms of any and all leases, it being agreed between Borrower and Lender that rent shall be paid as provided in said leases and not otherwise. The foregoing shall not prevent Borrower from charging and collecting security deposits from each tenant leasing space on the Real Property.

(c) Authorizes Lender, by and through its employees, agents or a duly appointed receiver, at its option, at any time and from time to time, subject to the terms of the Lease, to enter upon the Property and to collect, in the name of Borrower, as its lawful attorney, or in its own name as Lender, any rents, issues, profits and income accrued but unpaid and/or in arrears, as well as the rents, issues, profits and income accruing and becoming payable. To this end, Borrower further agrees that it will cooperate with and facilitate, in all reasonable ways, Lender's collection of said issues, profits and income and will, upon request by Lender, execute a written notice to each tenant, occupant or licensee directing said tenant, occupant or licensee to pay directly to Lender all rents, issues, profits and income which are due and payable under said leases; provided, however, that Lender may notify said tenant, occupant or licensee of the effectiveness of this Assignment without first giving notice to Borrower or requesting Borrower to give such notice or join in such notice. To the extent that Lender or Lender's servicer collects any Rents prior to the occurrence of an event of default under this Assignment or any other Loan Documents, Lender shall apply such amounts to the regularly scheduled payment of principal and interest then due and owing or next becoming due and owing under the Note.

(d) Authorizes Lender, upon such entry, at its option, subject to the terms of the Lease and following the occurrence of an event of default under any of the Loan Documents to take over and assume the management, operation and maintenance of the Property and to perform all acts necessary and proper and to expend such sums out of the income of the Property as in Lender's sole discretion may be reasonable or necessary in connection therewith, in the same manner and to the same extent as Borrower theretofore might do. Borrower hereby releases all claims against Lender arising out of such management, operation and maintenance.

(e) Agrees to execute, upon the request of Lender, any and all other instruments requested by Lender to effectuate this Assignment or to accomplish any other purpose deemed by Lender to be necessary or appropriate in connection with this Assignment.

(f) Agrees and acknowledges that nothing in this Assignment shall be construed to limit or restrict in any way the rights and powers granted to Lender in the Note, the Mortgage or any of the other Loan Documents. The collection and application of the rents, issues and profits as described herein shall not constitute a waiver of any default which might at the time of application or thereafter exist under the Note, the Mortgage or any of the other Loan Documents, and the exercise by Lender of the rights provided herein shall not prevent Lender's exercise of any rights provided in the Note, the Mortgage or any of the other Loan Documents.

(g) Any Rents received directly by Borrower or its agents shall be held by Borrower in trust for Lender and shall not be commingled with other funds of Borrower. Borrower shall, within one (1) business day of its receipt of any such Rents, deliver all such Rents to Lender (or as Lender may direct).

4. Lender's Rights Following Default by Borrower. Lender may, after the occurrence of a default, from time to time, appoint and dismiss such agents or employees as shall be necessary or reasonable for the collection of the rents, issues, profits and income derived from the Property and for the proper care and operation of the Property, and Borrower hereby grants to Lender the authority to give such agents or employees so appointed full and irrevocable authority on Borrower's behalf to manage the Property and to do all acts relating to such management including, without limitation, the entry into and execution of new leases in the name of Borrower or otherwise, the alteration or amendment of existing leases, the authorization to repair or replace any fixtures or personal property included in the Property necessary in order to maintain the building or buildings and chattels incidental thereto in good and tenantable condition, and the effectuation of such alterations or improvements as in the judgment of Lender may be reasonable or necessary to maintain or increase the income from the Property. Lender shall have the sole control of such agents or employees, whose remuneration shall be paid out of the rents, issues and profits and income as hereinabove provided, at the rate of compensation accepted in the community where the Property is situated.

5. Application by Lender of Net Income from the Property. Lender shall, after the payment of all proper charges and expenses enumerated under Section 1, above, and after retaining sufficient sums to fully pay, as they become due, taxes, assessments, utilities and insurance premiums on insurance policies having coverages in requisite amounts (including liability, fire and extended coverage), credit the net income received by it from the Property, by virtue of this Assignment, to any amounts due and owing to Lender by Borrower under and pursuant to the terms of the Note, the Mortgage, this Assignment, and the other Loan Documents, but the manner of the application of such net income shall be determined in the sole discretion of Lender. Lender shall make a reasonable effort to collect the rents, income and profits, reserving, however, within its sole discretion, the right to determine the method of collection and the extent to which enforcement of the collection of delinquent rents, issues, income and profits shall be prosecuted. Notwithstanding the foregoing, no such credit shall be given by Lender for any sum or sums received from the rents, issues, profits and income of the Property until the money collected is actually received by Lender at its principal office as stated above (or at such other place as Lender

shall designate in writing), and no credit shall be given for any uncollected rents or other uncollected amounts or bills, nor shall credit be given for any rents, issues, profits and income derived from the Property under any court order or by operation of law until such amounts are actually received by Lender at its principal office as stated above. The net amount of income received by Lender hereunder and applied by Lender to the amounts due and owing by Borrower shall not serve to cure any default under the Note, the Mortgage or any of the other Loan Documents, nor shall any amounts received by Lender hereunder be in full satisfaction of the indebtedness evidenced by the Note unless such amounts are sufficient to pay such indebtedness in full (including any accrued but unpaid interest thereon, late payment charges and advancements) in accordance with the terms of the Note, Mortgage and other Loan Documents.

6. Limitation of Lender's Liability. Lender shall not be obligated to perform or discharge any obligation under the leases hereby assigned or under or by reason of this Assignment, and Borrower hereby agrees to indemnify and hold Lender harmless against any and all liability, loss or damage which Lender might incur under the leases or under or by reason of this Assignment and of and from any and all claims and demands whatsoever which may be asserted against Lender by reason of any alleged obligation or undertaking on Lender's part to perform or discharge any of the terms of such leases, except for claims and demands arising by reason of Lender's gross negligence or willful misconduct.

7. Reinstatement After Default. In the event that Borrower shall, with the written consent of Lender, reinstate the indebtedness evidenced by the Note completely in good standing, having complied with all the terms, covenants and conditions of the Note, the Mortgage and any of the other Loan Documents, then, in such event, Lender shall return possession of the Property to Borrower, and Borrower shall remain in possession of the Property unless and until another event of default occurs under the Note, the Mortgage, this Assignment or any of the other Loan Documents, at which time Lender may, at its option, again take possession of the Property under authority of and pursuant to the terms and provisions of this Assignment.

8. Tenants' Notification of Assignment. Upon request by Lender, at any time, Borrower will deliver a written notice to each of the tenants, occupants and lessees of the Property, which notice shall inform such tenants, occupants and lessees of this Assignment and instruct them that upon receipt of notice by them from Lender of the existence of an event of default by Borrower under the Note or under any of the other Loan Documents, all rents, issues, profits and income due thereafter shall be paid directly to Lender.

9. Satisfaction of Mortgage; Satisfaction of Assignment. This Assignment shall remain in full force and effect as long as the indebtedness evidenced by the Note remains unpaid in whole or in part. It is understood and agreed that a complete release or satisfaction of the aforesaid Mortgage shall operate as a complete release or satisfaction of all of Lender's rights and interest hereunder, and that satisfaction of said Mortgage shall operate to satisfy this Assignment.

10. Benefits and Burdens. The provisions of this Assignment shall inure to the benefit of Lender, its successors and assigns, and shall be binding upon Borrower, its personal representatives, heirs, successors and assigns. The creation of rights and powers under this Assignment in favor of, or available to, Lender shall, in no way whatsoever, be construed to impose

concomitant duties or obligations upon Lender in favor of Borrower except as expressly set forth herein.

11. Captions. The captions set forth at the beginning of the various paragraphs of this Assignment are for convenience only and shall not be used to interpret or construe the provisions of this Assignment.

12. Attorneys' Fees; Expenses. Borrower will upon demand pay to Lender the amount of any and all costs and expenses, including Reasonable Attorneys' Fees (as defined below) and out of pocket disbursements of its counsel and of any experts and agents, which Lender may incur in connection with: (a) any amendment to this Assignment; (b) filing or recording fees incurred with respect to or in connection with this Assignment; (c) the custody, preservation, use or operation of, or the sale of, collection from, or other realization upon, any of the Property; (d) the exercise or enforcement of any of the rights of Lender under this Assignment; or (e) the failure by Borrower to perform or observe any of the provisions of this Assignment. As used herein, the phrase "Reasonable Attorneys' Fees" shall mean fees charged by attorneys selected by Lender based upon such attorneys' then prevailing hourly rates as opposed to any statutory presumption specified by any statute then in effect in the State of Florida including, without limitation, all Reasonable Attorney's Fees and costs incurred in finalizing a judgment and in establishing the amount of reasonable fees and costs to be awarded.

13. Notice. Any notices required or permitted to be given hereunder shall be given as provided in the Mortgage.

14. Governing Law. This Assignment is to be governed by the internal laws of the State of Florida (without regard to its principles and provisions on conflicts of laws), provided that where collateral is located in a jurisdiction other than Florida, remedies available to Lender hereunder and under the laws of such jurisdiction shall be available to Lender without regard to any restriction of Florida law. If any provision of this Assignment shall be held to be legally invalid or unenforceable by any court of competent jurisdiction, all remaining provisions of this Assignment shall remain in full force and effect.

15. Submission to Jurisdiction. Borrower hereby irrevocably submits to the jurisdiction of any federal or state court sitting in Florida over any action or proceeding arising out of or related to this Assignment and agree with Lender that personal jurisdiction over Borrower rests with such courts for purposes of any action on or related to this Assignment. Borrower hereby waives personal service by manual delivery and agree that service of process may be made by prepaid certified mail directed to Borrower at the address of Borrower for notices under the Mortgage or at such other address as may be designated in writing by Borrower to Lender, and that upon mailing of such process such service will be effective as if Borrower was personally served. Borrower waives any objection to venue in any such action or proceeding on the basis of inconvenient forum.

16. Counterparts. This Assignment may be executed in any number of counterparts, each of which when so executed and delivered shall be an original, but all of which shall together constitute one and the same instrument.

17. WAIVER OF TRIAL BY JURY. BORROWER HEREBY KNOWINGLY, VOLUNTARILY AND INTENTIONALLY WAIVES THE RIGHT BORROWER MAY HAVE TO A TRIAL BY JURY IN RESPECT OF ANY LITIGATION BASED HEREON, OR ARISING OUT OF, UNDER OR IN CONNECTION WITH THIS ASSIGNMENT, OR ANY COURSE OF CONDUCT, COURSE OF DEALING, STATEMENTS (WHETHER VERBAL OR WRITTEN) OR ACTIONS OF BORROWER. THIS PROVISION IS A MATERIAL INDUCEMENT FOR LENDER EXTENDING CREDIT TO BORROWER. FURTHER, BORROWER HEREBY CERTIFIES THAT NO REPRESENTATIVE OR AGENT OF LENDER, NOR LENDER'S COUNSEL, HAS REPRESENTED, EXPRESSLY OR OTHERWISE, THAT LENDER WOULD NOT, IN THE EVENT OF SUCH LITIGATION, SEEK TO ENFORCE THIS WAIVER OF RIGHT TO JURY TRIAL PROVISION.

(end of text; signatures on following page)

IN WITNESS WHEREOF, Borrower has executed this Assignment under seal as of the day and year first above written.

**BORROWER:**

BLACK KNIGHT INVESTMENTS, L.L.C.,
an Alabama limited liability company

By: Michael Musgrove
Its: Sole Member

STATE OF FLORIDA
COUNTY OF ESCAMBIA

The foregoing instrument was acknowledged before me by means of ☑ physical presence or ☐ online notarization, this 10th day of June, 2025, by Michael Musgrove, sole member of Black Knight Investments, L.L.C., an Alabama limited liability company, on behalf of the company.

NOTARY PUBLIC

☐ Personally Known
or
☑ Produced Identification
Type of Identification Produced AL DL

ANDREA BENNETT
NOTARY PUBLIC
MY COMMISSION
EXPIRES 3-7-2029
STATE OF FLORIDA
COMMISSION NUMBER HH 647499

## EXHIBIT "A"

COMMENCE AT THE NORTHWEST CORNER OF LOT 1, BEING THE NORTHEAST CORNER OF LOT 205, HYER PLACE, A SUBDIVISION OF A PORTION OF SECTIONS 8 AND 9, TOWNSHIP 2 SOUTH, RANGE 30 WEST, AS RECORDED IN PLAT BOOK 1 AT PAGE 92, OF THE PUBLIC RECORDS OF ESCAMBIA COUNTY, FLORIDA; THENCE SOUTH 01 DEGREES 37 MINUTES 30 SECONDS WEST ALONG THE WEST LINE OF SAID LOT 1 (EAST LINE OF LOT 205) FOR A DISTANCE OF 25.00 FEET; THENCE SOUTH 88 DEGREES 30 MINUTES 00 SECONDS EAST FOR A DISTANCE OF 50.00 FEET TO THE EAST RIGHT OF WAY LINE OF "L" STREET (50' R/W); THENCE SOUTH 01 DEGREES 37 MINUTES 30 SECONDS WEST ALONG SAID EAST RIGHT OF WAY LINE FOR A DISTANCE OF 623.57 FEET TO THE POINT OF BEGINNING; THENCE CONTINUE SOUTH 01 DEGREES 37 MINUTES 30 SECONDS WEST ALONG SAID EAST RIGHT OF WAY LINE FOR A DISTANCE OF 192.60 FEET; THENCE SOUTH 88 DEGREES 30 MINUTES 00 SECONDS EAST FOR A DISTANCE OF 165.00 FEET; THENCE NORTH 01 DEGREES 37 MINUTES 30 SECONDS EAST FOR A DISTANCE OF 192.60 FEET; THENCE NORTH 88 DEGREES 30 MINUTES 00 SECONDS WEST FOR A DISTANCE OF 165.00 FEET TO THE POINT OF BEGINNING.

TOGETHER WITH EASEMENT FOR INGRESS AND EGRESS OVER:

THAT PORTION OF LOT 1 SECTION 8, TOWNSHIP 2 SOUTH, RANGE 30 WEST, ESCAMBIA COUNTY, FLORIDA, DESCRIBED AS FOLLOWS: COMMENCE AT THE NORTHWEST CORNER OF SAID LOT 1, BEING THE NORTHEAST CORNER OF LOT 205, HYER PLACE, A SUBDIVISION OF A PORTION OF SECTIONS 8 AND 9, TOWNSHIP 2 SOUTH, RANGE 30 WEST, AS RECORDED IN PLAT BOOK 1 AT PAGE 92, OF THE PUBLIC RECORDS OF SAID COUNTY; THENCE SOUTH 01 DEGREES 37 MINUTES 30 SECONDS WEST ALONG THE WEST LINE OF SAID LOT 1, (EAST LINE OF LOT 205) FOR A DISTANCE OF 25.00 FEET; THENCE SOUTH 88 DEGREES 30 MINUTES 00 SECONDS EAST FOR A DISTANCE OF 50.00 FEET TO THE EAST RIGHT OF WAY LINE OF "L" STREET (50' R/W); THENCE SOUTH 01 DEGREES 37 MINUTES 30 SECONDS WEST ALONG SAID EAST RIGHT OF WAY LINE FOR A DISTANCE OF 816.17 FEET TO THE POINT OF BEGINNING; THENCE CONTINUE SOUTH 01 DEGREES 37 MINUTES 30 SECONDS WEST ALONG THE EAST RIGHT OF WAY LINE FOR A DISTANCE OF 20.00 FEET; THENCE SOUTH 88 DEGREES 30 MINUTES 00 SECONDS EAST FOR A DISTANCE OF 350.00 FEET; THENCE NORTH 01 DEGREES 37 MINUTES 30 SECONDS EAST FOR A DISTANCE OF 20.00 FEET; THENCE NORTH 88 DEGREES 30 MINUTES 00 SECONDS WEST FOR A DISTANCE OF 350.00 FEET TO THE POINT OF BEGINNING.

**Recorded in Public Records 6/17/2025 3:25 PM OR Book 9335 Page 409, Instrument #2025045616, Pam Childers Clerk of the Circuit Court Escambia County, FL Recording $35.50**

# STATE OF FLORIDA UNIFORM COMMERCIAL CODE
## FINANCING STATEMENT FORM

A. NAME & DAYTIME PHONE NUMBER OF CONTACT PERSON
STEPHEN R. MOORHEAD (850) 202-8522
B. Email address: SMOORHEAD@MOORHEADLAW.COM

C. SEND ACKNOWLEDGEMENT TO:
Name Moorhead Real Estate Law Group
Address 127 Palafox Place, Suite 200
Address
City/State/Zip Pensacola, FL 32502

**THE ABOVE SPACE IS FOR FILING OFFICE USE ONLY**

**1. DEBTOR'S EXACT FULL LEGAL NAME** – INSERT ONLY **ONE** DEBTOR NAME (**1a OR 1b**) – Do Not Abbreviate or Combine Names

| | | | | |
|---|---|---|---|---|
| 1.a ORGANIZATION'S NAME<br>BLACK KNIGHT INVESTMENTS, L.L.C. | | | | |
| 1.b INDIVIDUAL'S LAST NAME | FIRST PERSONAL NAME | ADDITIONAL NAME(S)/INITIAL(S) | SUFFIX | |
| 1.c MAILING ADDRESS Line One<br>1601 Hackberry Lane | This space not available. | | | |
| MAILING ADDRESS Line Two | CITY<br>Tuscaloosa | STATE<br>AL | POSTAL CODE<br>35401 | COUNTRY<br>USA |

**2. ADDITIONAL DEBTOR'S EXACT FULL LEGAL NAME** – INSERT ONLY **ONE** DEBTOR NAME (**2a OR 2b**) – Do Not Abbreviate or Combine Names

| | | | | |
|---|---|---|---|---|
| 2.a ORGANIZATION'S NAME | | | | |
| 2.b INDIVIDUAL'S SURNAME | FIRST PERSONAL NAME | ADDITIONAL NAME(S)/INITIAL(S) | SUFFIX | |
| 2.c MAILING ADDRESS Line One | This space not available. | | | |
| MAILING ADDRESS Line Two | CITY | STATE | POSTAL CODE | COUNTRY |

**3. SECURED PARTY'S NAME** ( or NAME of TOTAL ASSIGNEE of ASSIGNOR S/P) – INSERT ONLY **ONE** SECURED PARTY (**3a OR3b**)

| | | | | |
|---|---|---|---|---|
| 3.a ORGANIZATION'S NAME<br>ROBERTSON BANKING COMPANY | | | | |
| 3.b INDIVIDUAL'S SURNAME | FIRST PERSONAL NAME | ADDITIONAL NAME(S)/INITIAL(S) | SUFFIX | |
| 3.c MAILING ADDRESS Line One<br>1400 Greensboro Avenue | This space not available. | | | |
| MAILING ADDRESS Line Two | CITY<br>Tuscaloosa | STATE<br>AL | POSTAL CODE<br>35401 | COUNTRY<br>USA |

**4.** This **FINANCING STATEMENT** covers the following collateral:

All rights, title, and interest of Borrower in and to the collateral described in Exhibit "B," as presently situated on the property more particularly in Exhibit "A" (hereinafter "Property") or under or above the same or any part or parcel thereof.

**5.** ALTERNATE DESIGNATION (if applicable) ☐ LESSEE/LESSOR ☐ CONSIGNEE/CONSIGNOR ☐ BAILEE/BAILOR
☐ AG. LIEN ☐ NON-UCC FILING ☐ SELLER/BUYER

**6. Florida DOCUMENTARY STAMP TAX** – YOU ARE REQUIRED TO CHECK **EXACTLY ONE** BOX

☒ All documentary stamps due and payable or to become due and payable pursuant to s. 201.22 F.S., have been paid.

☐ Florida Documentary Stamp Tax is not required.

**7. OPTIONAL FILER REFERENCE DATA 251155**

# EXHIBIT "A"

The Land referred to herein below is situated in an Unincorporated Area in the County of ESCAMBIA, State of Florida, and is described as follows:

COMMENCE AT THE NORTHWEST CORNER OF LOT 1, BEING THE NORTHEAST CORNER OF LOT 205, HYER PLACE, A SUBDIVISION OF A PORTION OF SECTIONS 8 AND 9, TOWNSHIP 2 SOUTH, RANGE 30 WEST, AS RECORDED IN PLAT BOOK 1 AT PAGE 92, OF THE PUBLIC RECORDS OF ESCAMBIA COUNTY, FLORIDA; THENCE SOUTH 01 DEGREES 37 MINUTES 30 SECONDS WEST ALONG THE WEST LINE OF SAID LOT 1 (EAST LINE OF LOT 205) FOR A DISTANCE OF 25.00 FEET; THENCE SOUTH 88 DEGREES 30 MINUTES 00 SECONDS EAST FOR A DISTANCE OF 50.00 FEET TO THE EAST RIGHT OF WAY LINE OF "L" STREET (50' R/W); THENCE SOUTH 01 DEGREES 37 MINUTES 30 SECONDS WEST ALONG SAID EAST RIGHT OF WAY LINE FOR A DISTANCE OF 623.57 FEET TO THE POINT OF BEGINNING; THENCE CONTINUE SOUTH 01 DEGREES 37 MINUTES 30 SECONDS WEST ALONG SAID EAST RIGHT OF WAY LINE FOR A DISTANCE OF 192.60 FEET; THENCE SOUTH 88 DEGREES 30 MINUTES 00 SECONDS EAST FOR A DISTANCE OF 165.00 FEET; THENCE NORTH 01 DEGREES 37 MINUTES 30 SECONDS EAST FOR A DISTANCE OF 192.60 FEET; THENCE NORTH 88 DEGREES 30 MINUTES 00 SECONDS WEST FOR A DISTANCE OF 165.00 FEET TO THE POINT OF BEGINNING.

TOGETHER WITH EASEMENT FOR INGRESS AND EGRESS OVER:

THAT PORTION OF LOT 1 SECTION 8, TOWNSHIP 2 SOUTH, RANGE 30 WEST, ESCAMBIA COUNTY, FLORIDA, DESCRIBED AS FOLLOWS: COMMENCE AT THE NORTHWEST CORNER OF SAID LOT 1, BEING THE NORTHEAST CORNER OF LOT 205, HYER PLACE, A SUBDIVISION OF A PORTION OF SECTIONS 8 AND 9, TOWNSHIP 2 SOUTH, RANGE 30 WEST, AS RECORDED IN PLAT BOOK 1 AT PAGE 92, OF THE PUBLIC RECORDS OF SAID COUNTY; THENCE SOUTH 01 DEGREES 37 MINUTES 30 SECONDS WEST ALONG THE WEST LINE OF SAID LOT 1, (EAST LINE OF LOT 205) FOR A DISTANCE OF 25.00 FEET; THENCE SOUTH 88 DEGREES 30 MINUTES 00 SECONDS EAST FOR A DISTANCE OF 50.00 FEET TO THE EAST RIGHT OF WAY LINE OF "L" STREET (50' R/W); THENCE SOUTH 01 DEGREES 37 MINUTES 30 SECONDS WEST ALONG SAID EAST RIGHT OF WAY LINE FOR A DISTANCE OF 816.17 FEET TO THE POINT OF BEGINNING; THENCE CONTINUE SOUTH 01 DEGREES 37 MINUTES 30 SECONDS WEST ALONG THE EAST RIGHT OF WAY LINE FOR A DISTANCE OF 20.00 FEET; THENCE SOUTH 88 DEGREES 30 MINUTES 00 SECONDS EAST FOR A DISTANCE OF 350.00 FEET; THENCE NORTH 01 DEGREES 37 MINUTES 30 SECONDS EAST FOR A DISTANCE OF 20.00 FEET; THENCE NORTH 88 DEGREES 30 MINUTES 00 SECONDS WEST FOR A DISTANCE OF 350.00 FEET TO THE POINT OF BEGINNING.

# EXHIBIT "B"

All rights, title, and interest of Debtor in and to the minerals, soil, flowers, shrubs, crops, trees, timber, and other emblements now or hereinafter on the property described in Exhibit "A" (hereinafter "Property") or under or above the same or any part or parcel thereof.

All machinery, apparatus, equipment, fittings, fixtures, whether actually or constructively attached to the Property and including all trade, domestic, and ornamental fixtures, all of the boardwalk decking, lumber, docks, boat slips, joists and beams contained in, on or around the mooring facility, and articles of personal property of every kind and nature whatsoever now or hereafter located in, upon, or under the Property or any part thereof and used or usable in connection with any present or future operation of the Property and now owned or hereafter acquired by Debtor, including, but without limiting the generality of the foregoing, all heating, air conditioning, freezing, lighting, laundry, incinerating, and power equipment, engines, pipes, pumps, tanks, motors, conduits, switchboards, plumbing, lifting, cleaning, fire prevention, fire extinguishing, ventilating, and communications apparatus, boilers, ranges, furnaces, oil burners or units thereof, appliances, air-cooling and air conditioning apparatus, vacuum cleaning systems, elevators, escalators, shades, screens, storm doors and windows, stoves, wall beds, refrigerators, attached cabinets, partitions, ducts and compressors, rugs and carpets, draperies, furniture and furnishings, together with all building materials and equipment now or hereafter delivered to the Property and intended to be installed therein, including, but not limited to, lumber, plaster, cement, shingles, roofing, plumbing, fixtures, pipe, lath, wallboard, cabinets, nails, sinks, toilets, furnaces, heaters, brick, tile, water heaters, screens, window frames, glass, doors, flooring, paint, lighting fixtures and unattached refrigerating, cooking, heating, and ventilating appliances and equipment, together with all additions and accessions thereto and replacements thereof.

All of the water, sanitary, and storm sewer systems now or hereafter owned by the Debtor which are now or hereafter located by, over, and upon the Property or any part and parcel thereof, and which water system includes all water mains, service laterals, hydrants, valves, and appurtenances, and which sewer system includes all sanitary sewer lines, including mains, laterals, manholes and appurtenances.

All paving for streets, roads, walkways, entranceways or access now or hereafter owned by Debtor and which are now or hereafter located on the Property or any part or parcel thereof.

All of the Debtor's interest as lessor in and to all leases or rental arrangements of the Property, or any part thereof, heretofore made and entered into by Debtor during the life of the security agreements or any extension or renewal thereof, together with all rents and payments in lieu of rents, together with any and all guarantees of such leases or rental arrangements and including all present and future security deposits and advance rentals.

Any and all awards or payments, including interest thereon, and the right to receive the same, as a result of: (a) the exercises of the right of eminent domain, (b) the alteration of the grade of any street, or (c) any other injury to, taking of, or decreases in the value of the Property described in Exhibit "A" or in this Exhibit.

All of the right, title, and interest of the Debtor in and to all unearned premiums accrued, accruing, or to accrue under any and all insurance policies now or hereafter provided pursuant to the terms of security agreements, and all proceeds or sums payable for the loss of or damage to: (a) the Property described in Exhibit "A" or herein, or (b) rents, revenues, income, profits, or proceeds from leases, franchises, concessions, or licenses of or on any part of the Property.

All accounts receivable, contracts and contract rights of Debtor arising from contracts entered into in connection with development, construction upon, or operation of the Property.

All rights of Debtor in and to any escrow funds being held by Secured Party for benefit of Debtor or balance thereof together with any interest earned thereon.

All of the right, title and interest of the Debtor in and to any trade names, names of business or fictitious names, if any, used in conjunction with the operation of any business or endeavor located on the Property described hereinabove.

All of Debtor's interests in all permit fees, impact fees, and utility security deposits or bonds paid or made in connection with the Property described hereinabove or any part or parcel thereof.

All contract rights and general intangibles now in force or hereafter acquired including, but not limited to, all collateral assignments of contract rights and/or proceeds.

**Recorded in Public Records 3/23/2018 9:59 AM OR Book 7874 Page 420, Instrument #2018022943, Pam Childers Clerk of the Circuit Court Escambia County, FL Recording $10.00**

This Instrument Was Prepared
By And Is To Be Returned To:
Processing Dept,
Emerald Coast Utilities Authority
9255 Sturdevant Street
Pensacola, Florida 32514-0311

# NOTICE OF LIEN

**STATE OF FLORIDA**
**COUNTY OF ESCAMBIA**

Notice is hereby given that the EMERALD COAST UTILITES AUTHORITY has a lien against the following described real property situated in Escambia County, Florida, for water, wastewater and/or sanitation service provided to the following customer:

BEG AT NW COR OF LOT 1 BEING NE COR LOT 205 HYER PLACE S/D PB 1 P 92 S 01 DEG 37 MIN 30 SEC W ALG W LI OF SD LOT 1 (E LI OF LOT 205) 25 FT S 88 DEG 30 MIN 00 SEC E 50 FT TO E R/W LI OF L ST (50 FT R/W) S 01 DEG 37 MIN 30 SEC W ALG SD E R/W LI 623 57/100 FT TO POB S 01 DEG 37 MIN 30 SEC W ALG SD E R/W LI 192 60/100 FT S 88 DEG 30 MIN 00 SEC E 165 FT N 01 DEG 37 MIN 30 SEC E 192 60/100 FT N 88 DEG 30 MIN 00 SEC W 165 FT TO POB OR 7644 P 1072

Customer: A & L Properties

Account Number: 401061-189425

Amount of Lien: $ 153.04, together with additional unpaid utility service charges, if any, which may accrue subsequent to the date of this notice and simple interest on unpaid charges at 18 percent per annum, or at such lesser rate as may be allowed by law.

This lien is imposed in accordance with Section 159.17, Florida Statutes, Chapter 92-248, Laws of Florida, as amended and Emerald Coast Utilities Authority Resolution 87-10, as amended, and this lien shall be prior to all other liens on such lands or premises except the lien of state, county, and municipal taxes and shall be on a parity with the lien of such state, county, and municipal taxes.

Provided however, that if the above-named customer has conveyed said property by means of deed recorded in the public records of Escambia County, Florida, prior to the recording of this instrument, or if the interest of the above-named customer is foreclosed by a proceeding in which notice of lis pendens has been filed prior to the recording of this instrument, this lien shall be void and of no effect.

Dated: 3/21/18

Rita Holley Pace
Notary Public
State of Florida
My Commission Expires 08/11/2019
Commision No. FF 908717

EMERALD COAST UTILITIES AUTHORITY

BY: _____

STATE OF FLORIDA
COUNTY OF ESCAMBIA
The foregoing instrument was acknowledged before me this 21st day of March, 2017, by Lashonda Salter of the Emerald Coast Utilities Authority, who is personally known to me and who did not take an oath.

Notary Public – State of Florida

RWK:ls
Revised 05/31/11