APPLICATION FOR TAX DEED

Section 197.502, Florida Statutes

512
R. 12/16

Application Number: 2100413

To: Tax Collector of ESCAMBIA COUNTY, Florida

I,
KEYS FUNDING LLC - 2019
US BANK CF KEYS FUNDING LLC - 2019
PO BOX 645040
CINCINNATI, OH 45264-5040,
hold the listed tax certificate and hereby surrender the same to the Tax Collector and make tax deed application thereon:

Account Number	Certificate No.	Date	Legal Description
04-3928-060	2019/1923	06-01-2019	UNIT 5 BLDG 2 #10 HILLBROOK WAY OF HILLBROOK TOWNHOMES CONDO ALSO 1/31 INT IN COMMON ELEMENTS OR 5827 P 1915

I agree to:

- pay any current taxes, if due and
- redeem all outstanding tax certificates plus interest not in my possession, and
- pay all delinquent and omitted taxes, plus interest covering the property.
- pay all Tax Collector's fees, property information report costs, Clerk of the Court costs, charges and fees, and Sheriff's costs, if applicable.

Attached is the tax sale certificate on which this application is based and all other certificates of the same legal description which are in my possession.

Electronic signature on file
KEYS FUNDING LLC - 2019
US BANK CF KEYS FUNDING LLC - 2019
PO BOX 645040
CINCINNATI, OH 45264-5040

04-22-2021
Application Date

Applicant's signature

Part 5: Clerk of Court Certified Amounts (Lines 8-14)	
8. Processing tax deed fee	
9. Certified or registered mail charge	
10. Clerk of Court advertising, notice for newspaper, and electronic auction fees	
11. Recording fee for certificate of notice	
12. Sheriff's fees	
13. Interest (see Clerk of Court Instructions, page 2)	
14. **Total Paid** (Lines 8-13)	
15. Plus one-half of the assessed value of homestead property, if applicable under s. 197.502(6)(c), F.S.	
16. Statutory opening bid (total of Lines 7, 14, 15, and 16 if applicable)	

Sign here: _____ Date of sale 05/02/2022
Signature, Clerk of Court or Designee

INSTRUCTIONS

PLUS $6.25

Tax Collector (complete Parts 1-4)

Part 2: Certificates Owned by Applicant and Filed with Tax Deed Application
Enter the Face Amount of Certificate in Column 3 and the Interest in Column 4 for each certificate number. Add Columns 3 and 4 and enter the amount in Column 5.

Part 3: Other Certificates Redeemed by Applicant (Other than County)
Total. Add the amounts in Columns 3, 4 and 5

Part 4: Tax Collector Certified Amounts (Lines 1-7)

Line 1, enter the total of Part 2 plus the total of Part 3 above.

Total Paid, Line 7: Add the amounts of Lines 1-6

Line 6, Interest accrued by tax collector. Calculate the 1.5 percent interest accrued from the month after the date of application through the month this form is certified to the clerk. Enter the amount to be certified to the clerk on **Line 6**. The interest calculated by the tax collector stops before the interest calculated by the clerk begins. See Section 197.542, F.S., and Rule 12D-13.060(3), Florida Administrative Code.

The tax collector's interest for redemption at the time of the tax deed application is a cost of redemption, which encompasses various percentages of interest on certificates and omitted or delinquent taxes under Section 197.502, F.S. This interest is calculated before the tax collector calculates the interest in Section 197.542, F.S.

Attach certified statement of names and addresses of persons who must be notified before the sale of the property. Send this form and any required attachments to the Clerk of Court within 10 days after it is signed.

Clerk of Court (complete Part 5)

Line 13: Interest is calculated at the rate of 1.5 percent per month starting from the first day of the month after the month of certification of this form through the last day of the month in which the sale will be held. Multiply the calculated rate by the total of **Line 7**, minus **Line 6**, plus **Lines 8** through **12**. Enter the amount on **Line 13**.

Line 14: Enter the total of Lines 8-13. Complete Lines 15-18, if applicable.

UNIT 5 BLDG 2 #10 HILLBROOK WAY OF HILLBROOK TOWNHOMES CONDO ALSO 1/31 INT IN COMMON ELEMENTS OR 5827 P 1915

FLORIDA

CERTIFICATION OF TAX DEED APPLICATION

Sections 197.502 and 197.542, Florida Statutes

DR-513
Rule 12D-16.002 F.A.C
Effective 07/19

0522.48

Part 1: Tax Deed Application Information

Applicant Name Applicant Address	KEYS FUNDING LLC - 2019 US BANK CF KEYS FUNDING LLC - 2019 PO BOX 645040 CINCINNATI, OH 45264-5040	Application date	Apr 22, 2021
Property description	WADE CHRISTOPHER M WADE RHONDA R 122 GRIFFIN WAY CANTON, GA 30115 10 HILLBROOK WAY B-2 U-5 04-3928-060 UNIT 5 BLDG 2 #10 HILLBROOK WAY OF HILLBROOK TOWNHOMES CONDO ALSO 1/31 INT IN COMMON ELEMENTS OR 582 (Full legal attached.)	Certificate #	2019 / 1923
		Date certificate issued	06/01/2019

Part 2: Certificates Owned by Applicant and Filed with Tax Deed Application

Column 1 Certificate Number	Column 2 Date of Certificate Sale	Column 3 Face Amount of Certificate	Column 4 Interest	Column 5: Total (Column 3 + Column 4)
# 2019/1923	06/01/2019	2,897.75	144.89	3,042.64
			➔Part 2: Total*	**3,042.64**

Part 3: Other Certificates Redeemed by Applicant (Other than County)

Column 1 Certificate Number	Column 2 Date of Other Certificate Sale	Column 3 Face Amount of Other Certificate	Column 4 Tax Collector's Fee	Column 5 Interest	Total (Column 3 + Column 4 + Column 5)
# 2020/2076	06/01/2020	3,192.59	6.25	159.63	3,358.47
				Part 3: Total*	**3,358.47**

Part 4: Tax Collector Certified Amounts (Lines 1-7)

1. Cost of all certificates in applicant's possession and other certificates redeemed by applicant (*Total of Parts 2 + 3 above)	6,401.11
2. Delinquent taxes paid by the applicant	0.00
3. Current taxes paid by the applicant	2,724.12
4. Property information report fee	200.00
5. Tax deed application fee	175.00
6. Interest accrued by tax collector under s.197.542, F.S. (see Tax Collector Instructions, page 2)	0.00
7. **Total Paid** (Lines 1-6)	9,500.23

I certify the above information is true and the tax certificates, interest, property information report fee, and tax collector's fees have been paid, and that the property information statement is attached.

Sign here: Shirley Rich, CFCA
Signature, Tax Collector or Designee

Escambia, Florida

Date May 6th, 2021

Send this certification to the Clerk of Court by 10 days after the date signed. See Instructions on Page 2

Chris Jones
Escambia County Property Appraiser

General Information

Parcel ID:	491S301103010001
Account:	043928060
Owners:	WADE CHRISTOPHER M WADE RHONDA R
Mail:	122 GRIFFIN WAY CANTON, GA 30115
Situs:	10 HILLBROOK WAY B-2 U-5 32503
Use Code:	CONDO-RES UNIT
Taxing Authority:	PENSACOLA CITY LIMITS
Tax Inquiry:	Open Tax Inquiry Window

Tax Inquiry link courtesy of Scott Lunsford
Escambia County Tax Collector

Assessments

Year	Land	Imprv	Total	*Cap Val*
2020	$0	$146,211	$146,211	$146,211
2019	$0	$158,925	$158,925	$158,925
2018	$0	$141,125	$141,125	$141,125

Disclaimer

Market Value Breakdown Letter

Tax Estimator

File for New Homestead Exemption Online

Report Storm Damage

Sales Data

Sale Date	Book	Page	Value	Type	Official Records (New Window)
07/31/2018	7963	1598	$179,000	WD	
01/2006	5827	1915	$130,000	WD	

Official Records Inquiry courtesy of Pam Childers
Escambia County Clerk of the Circuit Court and Comptroller

2020 Certified Roll Exemptions

None

Legal Description

UNIT 5 BLDG 2 #10 HILLBROOK WAY OF HILLBROOK TOWNHOMES CONDO ALSO 1/31 INT IN COMMON ELEMENTS OR 7963 P 1598

Extra Features

None

Parcel Information

Launch Interactive Map

Section Map Id: 05-2S-30-1

Approx. Acreage: 4.0924

Zoned: R-2A

Evacuation & Flood Information Open Report

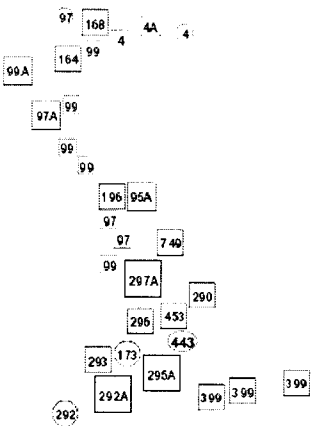

View Florida Department of Environmental Protection(DEP) Data

Buildings

Address:10 HILLBROOK WAY B-2 U-5, Year Built: 1974, Effective Year: 1974, PA Building ID#: 70486

Structural Elements

DECOR/MILLWORK-*ABOVE AVERAGE*
DWELLING UNITS-*1*
EXTERIOR WALL-*SIDING-LAP.AAVG*
FLOOR COVER-*CARPET*
FOUNDATION-*SLAB ON GRADE*
HEAT/AIR-*CENTRAL H/AC*
INTERIOR WALL-*DRYWALL-PLASTER*
NO. PLUMBING FIXTURES-*8*
NO. STORIES-*2*
ROOF COVER-*COMPOSITION SHG*
ROOF FRAMING-*WOOD FRAME/TRUS*
STORY HEIGHT-*0*
STRUCTURAL FRAME-*WOOD FRAME*

Areas - 2550 Total SF

BASE AREA - *1078*
LANAI - *332*
UPPER STORY FIN - *1041*
UTILITY FIN - *99*

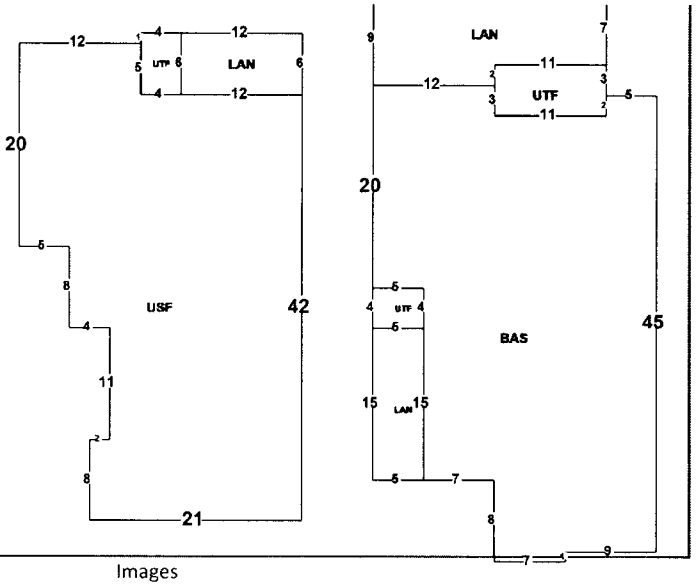

Images

5/29/15

The primary use of the assessment data is for the preparation of the current year tax roll. No responsibility or liability is assumed for inaccuracies or errors.

Last Updated:05/12/2021 (tc.2514)

Pam Childers
CLERK OF THE CIRCUIT COURT
ESCAMBIA COUNTY FLORIDA
INST# 2021057552 5/25/2021 2:56 PM
OFF REC BK: 8537 PG: 1993 Doc Type: TDN

NOTICE OF APPLICATION FOR TAX DEED

NOTICE IS HEREBY GIVEN, That **KEYS TAX FUNDING LLC – 19 US BANK** holder of **Tax Certificate No. 01923**, issued the **1st** day of **June, A.D., 2019** has filed same in my office and has made application for a tax deed to be issued thereon. Said certificate embraces the following described property in the County of Escambia, State of Florida, to wit:

UNIT 5 BLDG 2 #10 HILLBROOK WAY OF HILLBROOK TOWNHOMES CONDO ALSO 1/31 INT IN COMMON ELEMENTS OR 5827 P 1915

SECTION 49, TOWNSHIP 1 S, RANGE 30 W

TAX ACCOUNT NUMBER 043928060 (0522-48)

The assessment of the said property under the said certificate issued was in the name of

CHRISTOPHER M WADE and RHONDA R WADE

Unless said certificate shall be redeemed according to law, the property described therein will be sold to the highest bidder at public auction at 9:00 A.M. on the **first** Monday in the month of May, which is the **2nd day of May 2022.**

Dated this 25th day of May 2021.

In accordance with the AMERICANS WITH DISABILITIES ACT, if you are a person with a disability who needs special accommodation in order to participate in this proceeding you are entitled to the provision of certain assistance. Please contact Emily Hogg not later than seven days prior to the proceeding at Escambia County Government Complex, 221 Palafox Place Ste 110, Pensacola FL 32502. Telephone: 850-595-3793.

PAM CHILDERS
CLERK OF THE CIRCUIT COURT
ESCAMBIA COUNTY, FLORIDA

By:
Emily Hogg
Deputy Clerk

EXECUTED this 27th day of January, 2022.

HILLBROOK TOWNHOMES, INC., a Florida not-for-profit corporation

By: Kim Coffey
Its: Property Manager and Authorized Agent

STATE OF FLORIDA
COUNTY OF ESCAMBIA

Sworn to and subscribed before me by means of [X] physical presence or [ ] online notarization, this 27 day of January, 2022, by Kim Coffey as the Property Manager and Authorized Agent for Hillbrook Townhomes, Inc., a Florida not-for-profit corporation, on behalf of the corporation, who is personally known to me.

DAWN L DODSON
NOTARY PUBLIC
STATE OF FLORIDA
NO. GG 212942
MY COMMISSION EXPIRES MAY 31, 2022

(Signature of Notary Public)
Notary Public, State of Florida
Print Name: Dawn L. Dodson
My Commission Expires: May 31-2022

I HEREBY CERTIFY that a true copy of the foregoing Claim of Lien has been furnished by Certified Mail, Return Receipt #7021035000002385085 3 and #7021035000002385070 9 to Christopher M. Wade and Rhonda R. Wade, 10 Hillbrook Way, B-2, U-5, Pensacola, FL 32503 and 122 Griffin Way, Canton, GA 30115, on this 27 day of January, 2022.

John "Jay" A. Fraiser, Jr.
Moorhead Law Group
127 Palafox Place, Suite 200
Pensacola, FL 32502
Attorneys for Hillbrook Townhomes, Inc.

Order: QuickView_Gtr Gte
Doc: FLESCA:8709-01974~12033
Page 2 of 2
Requested By: codycampbell, Printed: 2/8/2022 11:53 AM

Recorded in Public Records 1/27/2022 3:34 PM OR Book 8709 Page 1974, Instrument #2022008557, Pam Childers Clerk of the Circuit Court Escambia County, FL Recording $18.50

Prepared By:
John "Jay" A. Fraiser, Esq.
127 Palafox Place, Suite 200
Pensacola, FL 32502-5813
RPBZ-1550-003

CLAIM OF LIEN

STATE OF FLORIDA
COUNTY OF ESCAMBIA

This is a claim of lien for unpaid assessments, together with reasonable attorney's fees and costs incurred by the undersigned Association, whose address is c/o Etheridge Property Management, 908 Gardengate Circle, Pensacola, FL 32504, incident to the collection of the assessments and enforcement of this lien, which is granted by §718.116, Florida Statutes, and the Declaration of Condominium recorded on April 3, 1974, in Official Records Book 787, Page 754 of the public records of Escambia County, Florida, and all supplements and amendments thereto, for the following described property:

Unit No. 5, Building 2, Hillbrook Town Homes, a Condominium, according to The Declaration of Condominium recorded in O.R. Book 787, Page 754, and all exhibits and amendments thereof, Public Records of Escambia County, Florida.

Parcel Identification Number: 49-1S-30-30-1103-010-004

The property address is 10 Hillbrook Way, B-2, U-5, Pensacola, FL 32503. The record title owners of the property are Christopher M Wade and Rhonda R. Wade, whose mailing address is 122 Griffin Way, Canton, GA 30115.

This Claim of Lien is to secure the payment of assessments against the owner or owners by the undersigned Association in the following amounts, as well as all amounts which may accrue subsequent to this date:

Item	Amount
Assessments	$5,158.10
Attorney's Fees	$275.00
Recording Fees	$37.50
Mailing Costs	$14.66
Total Due:	**$5,485.26**

In addition, pursuant to the Association's governing documents and Florida Statutes, the foregoing assessments will bear an interest at the rate of eighteen percent (18%) per annum, from the date each assessment became due, administrative late fees, reasonable attorney's fees, and costs incident to the collection and enforcement of this lien.

Order: QuickView_Gtr Gte
Doc: FLESCA:8709-01974~12033

Requested By: codycampbell, Printed: 2/8/2022 11:53 AM

RESIDENTIAL SALES

ABUTTING ROADWAY MAINTENANCE DISCLOSURE

ATTENTION: Pursuant to Escambia County Code of Ordinances Chapter 1-29.2, Article V, sellers of residential lots are required to disclose to buyers whether abutting roadways will be maintained by Escambia County. The disclosure must additionally provide that Escambia County does not accept roads for maintenance that have not been built or improved to meet county standards. Escambia County Code of Ordinances Chapter 1-29.2, Article V requires this disclosure be attached along with other attachments to the deed or other method of conveyance required to be made part of the public records of Escambia County, Florida. Note: Acceptance for filing by County employees of this disclosure shall in no way be construed as an acknowledgment by the County of the veracity of any disclosure statement.

Name of Roadway: Hillbrook

Legal Address of Property: 10 Hillbrook Way, Pensacola, FL 32503

The County ( ) has accepted (X) has not accepted the abutting roadway for maintenance.

This form completed by: Southtrust Law & Title, Inc.
Name
1184 Eglin Parkway
Address
Shalimar, FL 32579
City, State, Zip Code

AS TO SELLER(S):

Seller's Name: Daniel Thompson — Witness' Name:

Seller's Name: Elaine Thompson — Witness' Name:

AS TO BUYER(S):

Buyer's Name: Christopher M. Wade — Witness' Name:

Buyer's Name: Rhonda R. Wade — Witness' Name:

THIS FORM APPROVED BY THE
ESCAMBIA COUNTY BOARD
OF COUNTY COMMISSIONERS
Effective: 4/15/95

Signed, sealed and delivered in our presence:

Witness Name: Allison Brandt

Witness Name: Jeremy Dubyak

Daniel Thompson

Elaine Thompson

State of Florida
County of Escambia

The foregoing instrument was acknowledged before me this 31st day of July, 2018 by Daniel Thompson and Elaine Thompson, who [ ] are personally known or [X] have produced a driver's license as identification.

[Notary Seal]

JEREMY L. DUBYAK
Commission # GG 022056
Expires August 18, 2020
Bonded Thru Troy Fain Insurance 800-385-7019

Notary Public

Printed Name: _____

My Commission Expires: _____

Recorded in Public Records 9/7/2018 2:26 PM OR Book 7963 Page 1598, Instrument #2018072021, Pam Childers Clerk of the Circuit Court Escambia County, FL Recording $27.00 Deed Stamps $1,253.00

27.00
1253.00
1280.00

Prepared by and return to:
Jeremy L. Dubyak
Attorney at Law
Southtrust Law & Title, Inc.
1184 Eglin Pkwy
Shalimar, FL 32579
850-609-1400
File Number: **18-0242**
Will Call No.:

[Space Above This Line For Recording Data]

Warranty Deed

This Warranty Deed made this **5th** day of **September, 2018**, between **Daniel Thompson and Elaine Thompson, husband and wife,** whose post office address is **9701 Shadow Wood Drive, Pensacola, FL 32514**, grantor, and **Christopher M. Wade and Rhonda R. Wade, husband and wife,** whose post office address is **122 Griffin Way, Canton, GA 30115**, grantee:

(Whenever used herein the terms "grantor" and "grantee" include all the parties to this instrument and the heirs, legal representatives, and assigns of individuals, and the successors and assigns of corporations, trusts and trustees)

Witnesseth, that said grantor, for and in consideration of the sum of TEN AND NO/100 DOLLARS ($10.00) and other good and valuable considerations to said grantor in hand paid by said grantee, the receipt whereof is hereby acknowledged, has granted, bargained, and sold to the said grantee, and grantee's heirs and assigns forever, the following described land, situate, lying and being in **Escambia County, Florida** to-wit:

> **Unit No. 5, Building 2, Hillbrook Town Homes, a Condominium, according to The Declaration of Condominium recorded in O.R. Book 787, Page 754, and all exhibits and amendments thereof, Public Records of Escambia County, Florida.**
>
> **Parcel Identification Number: 49-1S-30-30-1103-010-001**
>
> **Subject to taxes for 2018 and subsequent years; covenants, conditions, restrictions, easements, reservations and limitations of record, if any.**

Together with all the tenements, hereditaments and appurtenances thereto belonging or in anywise appertaining.

To Have and to Hold, the same in fee simple forever.

And the grantor hereby covenants with said grantee that the grantor is lawfully seized of said land in fee simple; that the grantor has good right and lawful authority to sell and convey said land; that the grantor hereby fully warrants the title to said land and will defend the same against the lawful claims of all persons whomsoever; and that said land is free of all encumbrances, except taxes accruing subsequent to **December 31, 2017**.

In Witness Whereof, grantor has hereunto set grantor's hand and seal the day and year first above written.

PROPERTY INFORMATION REPORT

February 24, 2022
Tax Account #:04-3928-060

LEGAL DESCRIPTION
EXHIBIT "A"

UNIT 5 BLDG 2 #10 HILLBROOK WAY OF HILLBROOK TOWNHOMES CONDO ALSO 1/31 INT IN COMMON ELEMENTS OR 5827 P 1915*

SECTION 49, TOWNSHIP 1 S, RANGE 30 W

TAX ACCOUNT NUMBER 04-3928-060(0522-48)

***ABSTRACTOR'S NOTE: BOOK/PAGE HAVE CHANGED TO OR 7963 P 1598**

PERDIDO TITLE & ABSTRACT, INC.

PROPERTY INFORMATION REPORT

3050 Concho Drive, Pensacola, Florida 32507 | Phone 850-466-3077

Scott Lunsford
Escambia County Tax Collector
P.O. Box 1312
Pensacola, FL 32591

CERTIFICATION: TITLE SEARCH FOR TDA

TAX DEED SALE DATE: **MAY 2, 2022**

TAX ACCOUNT #: **04-3928-060**

CERTIFICATE #: **2019-1923**

In compliance with Section 197.522, Florida Statutes, the following is a list of names and addresses of those persons, firms, and/or agencies having legal interest in or claim against the above-described property. The above-referenced tax sale certificate is being submitted as proper notification of tax deed sale.

YES	NO	
☒	☐	**Notify City of Pensacola, P.O. Box 12910, 32521**
☐	☒	**Notify Escambia County, 190 Governmental Center, 32502**
☐	☒	**Homestead for _2020_ tax year.**

CHRISTOPHER M. WADE
AND RHONDA R. WADE
10 HILLBROOK WAY, BLDG 2, UNIT 5
PENSACOLA, FL 32503

CHRISTOPHER M. WADE
AND RHONDA R. WADE
122 GRIFFIN WAY
CANTON, GA 30115

HILLBROOK TOWNHOMES, INC.
908 GARDENGATE CIRCLE
PENSACOLA, FL 32504

Certified and delivered to Escambia County Tax Collector, this 24th day of February, 2022.

PERDIDO TITLE & ABSTRACT, INC.

BY: Michael A. Campbell, As It's President

NOTE: The above listed addresses are based upon current information available, but addresses are not guaranteed to be true or correct.

PROPERTY INFORMATION REPORT
CONTINUATION PAGE

February 24, 2022
Tax Account #: **04-3928-060**

1. The Grantee(s) of the last deed(s) of record is/are: **CHRISTOPHER M. WADE AND RHONDA R. WADE**

   By Virtue of Warranty Deed recorded 9/7/2018 in OR 7963/1598

2. The land covered by this Report is: **See Attached Exhibit "A"**

3. The following unsatisfied mortgages, liens, and judgments affecting the land covered by this Report appear of record:

   a. **Lien in favor of Hillbrook Townhomes, Inc. recorded 1/27/2022 – OR 8709/1974**

4. Taxes:

   Taxes for the year(s) 2018-2020 are delinquent.
   Tax Account #: 04-3928-060
   Assessed Value: $146,211.00
   Exemptions: NONE

5. We find the following HOA names in our search (if a condominium, the condo docs book and page are included for your review): **HILLBROOK TOWNHOMES, INC.**

Payment of any special liens/assessments imposed by City, County, and/or State.

Note: Escambia County and/or local municipalities may impose special liens/assessments. These liens/assessments are not discovered in a title search or shown above. These special assessments typically create a lien on real property. The entity that governs subject property must be contacted to verify payment status.

perdido
title & abstract, inc.

PROPERTY INFORMATION REPORT

3050 Concho Drive, Pensacola, Florida 32507 | Phone: 850-466-3077

THE ATTACHED REPORT IS ISSUED TO:

SCOTT LUNSFORD, ESCAMBIA COUNTY TAX COLLECTOR

TAX ACCOUNT #: **04-3928-060** CERTIFICATE #: **2019-1923**

THIS REPORT IS NOT TITLE INSURANCE. THE LIABILITY FOR ERRORS OR OMISSIONS IN THIS REPORT IS LIMITED TO THE PERSON(S) EXPRESSLY IDENTIFIED BY NAME IN THE PROPERTY INFORMATION REPORT AS THE RECIPIENT(S) OF THE PROPERTY INFORMATION REPORT.

The attached Report prepared in accordance with the instructions given by the user named above includes a listing of the owner(s) of record of the land described herein together with current and delinquent ad valorem tax information and a listing and copies of all open or unsatisfied leases, mortgages, judgments and encumbrances recorded in the Official Record Books of Escambia County, Florida that appear to encumber the title to said land as listed on page 2 herein. It is the responsibility of the party named above to verify receipt of each document listed. If a copy of any document listed is not received, the office issuing this Report must be contacted immediately.

This Report is subject to: Current year taxes; taxes and assessments due now or in subsequent years; oil, gas, and mineral or any subsurface rights of any kind or nature; easements, restrictions and covenants of record; encroachments, overlaps, boundary line disputes, and any other matters that would be disclosed by an accurate survey and inspection of the premises.

This Report does not insure or guarantee the validity or sufficiency of any document attached, nor is it to be considered a title insurance policy, an opinion of title, a guarantee of title, or as any other form of guarantee or warranty of title.

Use of the term "Report" herein refers to the Property Information Report and the documents attached hereto.

Period Searched: **February 8, 2002 to and including February 8, 2022** Abstractor: **Cody Campbell**

BY

Michael A. Campbell,
As President
Dated: February 24, 2022

W A R N I N G

THERE ARE UNPAID TAXES ON PROPERTY WHICH YOU OWN OR IN WHICH YOU HAVE A LEGAL INTEREST. THE PROPERTY WILL BE SOLD AT PUBLIC AUCTION ON May 2, 2022, UNLESS THE TAXES ARE PAID. SHOULD YOU NEED FURTHER INFORMATION CONTACT THE CLERK OF THE CIRCUIT COURT IMMEDIATELY AT THE COUNTY COURTHOUSE IN PENSACOLA, FLORIDA, OR CALL 850-595-3793.

NOTICE OF APPLICATION FOR TAX DEED

NOTICE IS HEREBY GIVEN, That **KEYS TAX FUNDING LLC – 19 US BANK** holder of **Tax Certificate No. 01923**, issued the **1st** day of **June, A.D., 2019** has filed same in my office and has made application for a tax deed to be issued thereon. Said certificate embraces the following described property in the County of Escambia, State of Florida, to wit:

UNIT 5 BLDG 2 #10 HILLBROOK WAY OF HILLBROOK TOWNHOMES CONDO ALSO 1/31 INT IN COMMON ELEMENTS OR 5827 P 1915

SECTION 49, TOWNSHIP 1 S, RANGE 30 W

TAX ACCOUNT NUMBER 043928060 (0522-48)

The assessment of the said property under the said certificate issued was in the name of

CHRISTOPHER M WADE and RHONDA R WADE

Unless said certificate shall be redeemed according to law, the property described therein will be sold to the highest bidder at public auction at 9:00 A.M. on the **first** Monday in the month of May, which is the **2nd day of May 2022.**

Dated this 10th day of March 2022.

In accordance with the AMERICANS WITH DISABILITIES ACT, if you are a person with a disability who needs special accommodation in order to participate in this proceeding you are entitled to the provision of certain assistance. Please contact Emily Hogg not later than seven days prior to the proceeding at Escambia County Government Complex, 221 Palafox Place Ste 110, Pensacola FL 32502. Telephone: 850-595-3793.

Post Property:

10 HILLBROOK WAY B-2 U-5 32503

PAM CHILDERS
CLERK OF THE CIRCUIT COURT
ESCAMBIA COUNTY, FLORIDA

By:
Emily Hogg
Deputy Clerk

WARNING

THERE ARE UNPAID TAXES ON PROPERTY WHICH YOU OWN OR IN WHICH YOU HAVE A LEGAL INTEREST. THE PROPERTY WILL BE SOLD AT PUBLIC AUCTION ON May 2, 2022, UNLESS THE TAXES ARE PAID. SHOULD YOU NEED FURTHER INFORMATION CONTACT THE CLERK OF THE CIRCUIT COURT IMMEDIATELY AT THE COUNTY COURTHOUSE IN PENSACOLA, FLORIDA, OR CALL 850-595-3793.

NOTICE OF APPLICATION FOR TAX DEED

NOTICE IS HEREBY GIVEN, That **KEYS TAX FUNDING LLC – 19 US BANK** holder of **Tax Certificate No. 01923**, issued the **1st** day of **June, A.D., 2019** has filed same in my office and has made application for a tax deed to be issued thereon. Said certificate embraces the following described property in the County of Escambia, State of Florida, to wit:

UNIT 5 BLDG 2 #10 HILLBROOK WAY OF HILLBROOK TOWNHOMES CONDO ALSO 1/31 INT IN COMMON ELEMENTS OR 5827 P 1915

SECTION 49, TOWNSHIP 1 S, RANGE 30 W

TAX ACCOUNT NUMBER 043928060 (0522-48)

The assessment of the said property under the said certificate issued was in the name of

CHRISTOPHER M WADE and RHONDA R WADE

Unless said certificate shall be redeemed according to law, the property described therein will be sold to the highest bidder at public auction at 9:00 A.M. on the **first** Monday in the month of May, which is the **2nd day of May 2022.**

Dated this 10th day of March 2022.

In accordance with the AMERICANS WITH DISABILITIES ACT, if you are a person with a disability who needs special accommodation in order to participate in this proceeding you are entitled to the provision of certain assistance. Please contact Emily Hogg not later than seven days prior to the proceeding at Escambia County Government Complex, 221 Palafox Place Ste 110, Pensacola FL 32502. Telephone: 850-595-3793.

PAM CHILDERS
CLERK OF THE CIRCUIT COURT
ESCAMBIA COUNTY, FLORIDA

By:
Emily Hogg
Deputy Clerk

STATE OF FLORIDA
COUNTY OF ESCAMBIA

CERTIFICATE OF NOTICE OF MAILING
NOTICE OF APPLICATION FOR TAX DEED

CERTIFICATE # 01923 of 2019

I, PAM CHILDERS, CLERK OF THE CIRCUIT COURT OF ESCAMBIA COUNTY, FLORIDA, do hereby certify that I did on March 17, 2022, mail a copy of the foregoing Notice of Application for Tax Deed, addressed to:

CHRISTOPHER M WADE 122 GRIFFIN WAY CANTON, GA 30115	RHONDA R WADE 122 GRIFFIN WAY CANTON, GA 30115
CHRISTOPHER M. WADE 10 HILLBROOK WAY, BLDG 2, UNIT 5 PENSACOLA, FL 32503	RHONDA R. WADE 10 HILLBROOK WAY, BLDG 2, UNIT 5 PENSACOLA, FL 32503
HILLBROOK TOWNHOMES, INC. 908 GARDENGATE CIRCLE PENSACOLA, FL 32504	CITY OF PENSACOLA TREASURY DIVISION P O BOX 12910 PENSACOLA FL 32521

WITNESS my official seal this 17th day of March 2022.

PAM CHILDERS
CLERK OF THE CIRCUIT COURT
ESCAMBIA COUNTY, FLORIDA

By:
Emily Hogg
Deputy Clerk

Search Property | Property Sheet | Lien Holder's | Sold To | Redeem | Forms | Courtview | Benchmark

PAM CHILDERS
CLERK OF THE CIRCUIT COURT
ESCAMBIA COUNTY, FLORIDA

Tax Deed - Redemption Calculator

Account: 043928060 Certificate Number: 001923 of 2019

Redemption: No | Application Date: 4/22/2021 | Interest Rate: 18%

	Final Redemption Payment ESTIMATED	Redemption Overpayment ACTUAL
	Auction Date 5/2/2022	Redemption Date 3/25/2022
Months	13	11
Tax Collector	$9,500.23	$9,500.23
Tax Collector Interest	$1,852.54	$1,567.54
Tax Collector Fee	$6.25	$6.25
Total Tax Collector	$11,359.02	$11,074.02 TC
Record TDA Notice	$17.00	$17.00
Clerk Fee	$130.00	$130.00
Sheriff Fee	$120.00	$120.00
Legal Advertisement	$200.00	$200.00
App. Fee Interest	$91.07	$77.06
Total Clerk	$558.07	$544.06
Release TDA Notice (Recording)	$10.00	$10.00
Release TDA Notice (Prep Fee)	$7.00	$7.00
Postage	$37.08	$37.08
Researcher Copies	$0.00	$0.00
Total Redemption Amount	$11,971.17	$11,672.16
	Repayment Overpayment Refund Amount	$299.01
Book/Page	8537	1993

Notes

PAM CHILDERS
CLERK OF THE CIRCUIT COURT
ARCHIVES AND RECORDS
CHILDSUPPORT
CIRCUIT CIVIL
CIRCUIT CRIMINAL
COUNTY CIVIL
COUNTY CRIMINAL
DOMESTIC RELATIONS
FAMILY LAW
JURY ASSEMBLY
JUVENILE
MENTAL HEALTH
MIS
OPERATIONAL SERVICES
PROBATE
TRAFFIC

BRANCH OFFICES
ARCHIVES AND RECORDS
JUVENILE DIVISION
CENTURY

CLERK TO THE BOARD OF
COUNTY COMMISSIONERS
OFFICIAL RECORDS
COUNTY TREASURY
AUDITOR

COUNTY OF ESCAMBIA
OFFICE OF THE
CLERK OF THE CIRCUIT COURT

Case # 2019 TD 001923
Redeemed Date 3/25/2022
Name CHRISTOPHER M WADE 10 HILLBROOK WAY PENSACOLA FL 32503

Clerk's Total = TAXDEED	$558.07 $11,618.08
Due Tax Collector = TAXDEED	$11,359.02
Postage = TD2	$37.08
ResearcherCopies = TD6	$0.00
Release TDA Notice (Recording) = RECORD2	$10.00
Release TDA Notice (Prep Fee) = TD4	$7.00

• **For Office Use Only**

Date	Docket	Desc	Amount Owed	Amount Due	Payee Name

FINANCIAL SUMMARY

No Information Available - See Dockets

PAM CHILDERS
CLERK OF THE CIRCUIT COURT
ARCHIVES AND RECORDS
CHILDSUPPORT
CIRCUIT CIVIL
CIRCUIT CRIMINAL
COUNTY CIVIL
COUNTY CRIMINAL
DOMESTIC RELATIONS
FAMILY LAW
JURY ASSEMBLY
JUVENILE
MENTAL HEALTH
MIS
OPERATIONAL SERVICES
PROBATE
TRAFFIC

COUNTY OF ESCAMBIA
OFFICE OF THE
CLERK OF THE CIRCUIT COURT

BRANCH OFFICES
ARCHIVES AND RECORDS
JUVENILE DIVISION
CENTURY

CLERK TO THE BOARD OF
COUNTY COMMISSIONERS
OFFICIAL RECORDS
COUNTY TREASURY
AUDITOR

PAM CHILDERS, CLERK OF THE CIRCUIT COURT
Tax Certificate Redeemed From Sale
Account: 043928060 Certificate Number: 001923 of 2019

Payor: CHRISTOPHER M WADE 10 HILLBROOK WAY PENSACOLA FL 32503 Date 3/25/2022

Clerk's Check #	1	Clerk's Total	~~$558.07~~ $11,618.08
Tax Collector Check #	1	Tax Collector's Total	$11,359.02
		Postage	$37.08
		Researcher Copies	$0.00
		Recording	$10.00
		Prep Fee	$7.00
		Total Received	~~$11,971.17~~

$11,672.16

PAM CHILDERS
Clerk of the Circuit Court

Received By: _____
Deputy Clerk

Escambia County Government Complex • 221 Palafox Place Ste 110 • PENSACOLA, FLORIDA 32502
(850) 595-3793 • FAX (850) 595-4827 • http://www.clerk.co.escambia.fl.us

Pam Childers
CLERK OF THE CIRCUIT COURT
ESCAMBIA COUNTY FLORIDA
INST# 2022030382 3/25/2022 2:07 PM
OFF REC BK: 8749 PG: 6 Doc Type: RTD

RELEASE OF NOTICE OF APPLICATION FOR TAX DEED

Pursuant to § 197.502(5)(c), Florida Statutes, the Escambia County Clerk of Court fully releases the Notice of Tax Deed Application recorded at Official Records Book 8537, Page 1993, of Escambia County, for the tax certificate, tax deed, and property described below:

Tax Certificate No. Certificate No. 01923, issued the 1st day of June, A.D., 2019

TAX ACCOUNT NUMBER: **043928060 (0522-48)**

DESCRIPTION OF PROPERTY:

UNIT 5 BLDG 2 #10 HILLBROOK WAY OF HILLBROOK TOWNHOMES CONDO ALSO 1/31 INT IN COMMON ELEMENTS OR 5827 P 1915

SECTION 49, TOWNSHIP 1 S, RANGE 30 W

NAME IN WHICH ASSESSED: CHRISTOPHER M WADE and RHONDA R WADE

Dated this 25th day of March 2022.

PAM CHILDERS
CLERK OF THE CIRCUIT COURT
ESCAMBIA COUNTY, FLORIDA

By:
Emily Hogg
Deputy Clerk

WARNING

THERE ARE UNPAID TAXES ON PROPERTY WHICH YOU OWN OR IN WHICH YOU HAVE A LEGAL INTEREST. THE PROPERTY WILL BE SOLD AT PUBLIC AUCTION ON May 2, 2022, UNLESS THE TAXES ARE PAID. SHOULD YOU NEED FURTHER INFORMATION CONTACT THE CLERK OF THE CIRCUIT COURT IMMEDIATELY AT THE COUNTY COURTHOUSE IN PENSACOLA, FLORIDA, OR CALL 850-595-3793.

NOTICE OF APPLICATION FOR TAX DEED

NOTICE IS HEREBY GIVEN, That **KEYS TAX FUNDING LLC – 19 US BANK** holder of **Tax Certificate No. 01923**, issued the **1st** day of **June, A.D., 2019** has filed same in my office and has made application for a tax deed to be issued thereon. Said certificate embraces the following described property in the County of Escambia, State of Florida, to wit:

UNIT 5 BLDG 2 #10 HILLBROOK WAY OF HILLBROOK TOWNHOMES CONDO ALSO 1/31 INT IN COMMON ELEMENTS OR 5827 P 1915

SECTION 49, TOWNSHIP 1 S, RANGE 30 W

TAX ACCOUNT NUMBER 043928060 (0522-48)

The assessment of the said property under the said certificate issued was in the name of

CHRISTOPHER M WADE and RHONDA R WADE

Unless said certificate shall be redeemed according to law, the property described therein will be sold to the highest bidder at public auction at 9:00 A.M. on the **first** Monday in the month of May, which is the **2nd day of May 2022.**

Dated this 10th day of March 2022.

In accordance with the AMERICANS WITH DISABILITIES ACT, if you are a person with a disability who needs special accommodation in order to participate in this proceeding you are entitled to the provision of certain assistance. Please contact Emily Hogg not later than seven days prior to the proceeding at Escambia County Government Complex, 221 Palafox Place Ste 110, Pensacola FL 32502. Telephone: 850-595-3793.

Post Property:
10 HILLBROOK WAY B-2 U-5 32503

PAM CHILDERS
CLERK OF THE CIRCUIT COURT
ESCAMBIA COUNTY, FLORIDA

By:
Emily Hogg
Deputy Clerk

RECEIVED
2022 MAR 18 A 8:56
ESCAMBIA COUNTY, FL
SHERIFF'S OFFICE
CIVIL UNIT

Redeemed

ESCAMBIA COUNTY SHERIFF'S OFFICE
ESCAMBIA COUNTY, FLORIDA

NON-ENFORCEABLE RETURN OF SERVICE

0522-48

Document Number: ECSO22CIV010209NON **Agency Number:** 22-004486
Court: TAX DEED
County: ESCAMBIA
Case Number: CERT NO 01923 2019

Attorney/Agent:
PAM CHILDERS
CLERK OF COURT
TAX DEED

Plaintiff: RE: CHRISTOPHER M WADE AND RHONDA R WADE
Defendant:

Type of Process: NOTICE OF APPLICATION FOR TAX DEED

Received this Writ on 3/18/2022 at 8:55 AM and served same at 8:00 AM on 3/22/2022 in ESCAMBIA COUNTY, FLORIDA, by serving POST PROPERTY , the within named, to wit: , .

POSTED TO PROPERTY PER CLERKS OFFICE INSTRUCTIONS

CHIP W SIMMONS, SHERIFF
ESCAMBIA COUNTY, FLORIDA

By: P. Wise 918
P. WISE, CPS

Service Fee: $40.00
Receipt No: BILL

Printed By: KMJACKSON

Pam Childers
Clerk of the Circuit Court & Comptroller
Official Records
221 Palafox Place, Suite 110
Pensacola, FL 32502

CERTIFIED MAIL™

9171 9690 0935 0128 1908 26

quadient
FIRST-CLASS MAIL
IMI
$006.13 0
03/18/2022 ZIP 32502
043M31219251

US POSTAGE

322 NFE 1 921I0003/18/22
RETURN TO SENDER
WADE CHRISTOPHER
MOVED LEFT NO ADDRESS
UNABLE TO FORWARD
RETURN TO SENDER
BC. 32502583333 *2187-03331-18-38

CHRISTOPHER M WADE [0522-48]
122 GRIFFIN WAY
CANTON, GA 30115

FILED
2022 MAR 28 A 10:45
ESCAMBIA COUNTY, FL

CHRISTOPHER M WADE [0522-48]
122 GRIFFIN WAY
CANTON, GA 30115

9171 9690 0935 0128 1908 26

RHONDA R WADE [0522-48]
122 GRIFFIN WAY
CANTON, GA 30115

9171 9690 0935 0128 1908 33

CHRISTOPHER M. WADE [0522-48]
10 HILLBROOK WAY, BLDG 2, UNIT 5
PENSACOLA, FL 32503

9171 9690 0935 0128 1908 40

RHONDA R. WADE [0522-48]
10 HILLBROOK WAY, BLDG 2, UNIT 5
PENSACOLA, FL 32503

9171 9690 0935 0128 1908 57

HILLBROOK TOWNHOMES, INC.
[0522-48]
908 GARDENGATE CIRCLE
PENSACOLA, FL 32504

9171 9690 0935 0128 1908 64

CITY OF PENSACOLA [0522-48]
TREASURY DIVISION
P O BOX 12910
PENSACOLA FL 32521

9171 9690 0935 0128 1907 72

Redeemed

Escambia
Sun Press
PUBLISHED WEEKLY SINCE 1948
(Warrington) Pensacola, Escambia County, Florida

STATE OF FLORIDA
County of Escambia

Before the undersigned authority personally appeared Michael P. Driver who is personally known to me and who on oath says that he is Publisher of The Escambia Sun Press, a weekly newspaper published at (Warrington) Pensacola in Escambia County, Florida; that the attached copy of advertisement, being a NOTICE **in the matter of** TAX DEED SALE

DATE – 05-02-2022 – TAX CERTIFICATE #'S 01923

in the CIRCUIT **Court was published in said newspaper in the issues of**

MARCH 31 & APRIL 7, 14, 21, 2022

Affiant further says that the said Escambia Sun-Press is a newspaper published at (Warrington) Pensacola, in said Escambia County, Florida, and that the said newspaper has heretofore been continuously published in said Escambia County, Florida each week and has been entered as second class mail matter at the post office in Pensacola, in said Escambia and Santa Rosa Counties, Florida, for a period of one year next preceding the first publication of the attached copy of advertisement; and affiant further says that he has neither paid nor promised any person, firm or corporation any discount, rebate, commission or refund for the purpose of securing this advertisement for publication in the said newspaper.

Digitally signed by Michael P Driver
DN: c=US, o=The Escambia Sun Press LLC, ou=A01410D00000171E5A7746E0000AE64, cn=Michael P Driver
Date: 2022.04.21 08:15:50 -05'00'

PUBLISHER

Sworn to and subscribed before me this 21ST **day of** APRIL **A.D.,** 2022

Digitally signed by Heather Tuttle
DN: c=US, o=The Escambia Sun Press LLC, ou=A01410D00000171E5ABA6670000AE70, cn=Heather Tuttle
Date: 2022.04.21 08:29:17 -05'00'

HEATHER TUTTLE
NOTARY PUBLIC

HEATHER TUTTLE
Notary Public, State of Florida
My Comm. Expires June 24, 2024
Commission No. HH4627

NOTICE OF APPLICATION FOR TAX DEED

NOTICE IS HEREBY GIVEN, That KEYS TAX FUNDING LLC – 19 US BANK holder of Tax Certificate No. 01923, issued the 1st day of June, A.D., 2019 has filed same in my office and has made application for a tax deed to be issued thereon. Said certificate embraces the following described property in the County of Escambia, State of Florida, to wit:

UNIT 5 BLDG 2 #10 HILLBROOK WAY OF HILLBROOK TOWNHOMES CONDO ALSO 1/31 INT IN COMMON ELEMENTS OR 5827 P 1915 SECTION 49, TOWNSHIP 1 S, RANGE 30 W

TAX ACCOUNT NUMBER 043928060 (0522-48)

The assessment of the said property under the said certificate issued was in the name of CHRISTOPHER M WADE and RHONDA R WADE

Unless said certificate shall be redeemed according to law, the property described therein will be sold to the highest bidder at public auction at 9:00 A.M. on the first Monday in the month of May, which is the 2nd day of May 2022.

Dated this 17th day of March 2022.

In accordance with the AMERICANS WITH DISABILITIES ACT, if you are a person with a disability who needs special accommodation in order to participate in this proceeding you are entitled to the provision of certain assistance. Please contact Emily Hogg not later than seven days prior to the proceeding at Escambia County Government Complex, 221 Palafox Place Ste 110, Pensacola FL 32502. Telephone: 850-595-3793.

PAM CHILDERS
CLERK OF THE CIRCUIT COURT
ESCAMBIA COUNTY, FLORIDA
(SEAL)
By: Emily Hogg
Deputy Clerk

oaw-4w-03-31-04-07-14-21-2022

Pam Childers

Clerk of the Circuit Court and Comptroller, Escambia County

Clerk of Courts • County Comptroller • Clerk of the Board of County Commissioners • Recorder •

January 17, 2024

Christopher Wade
10 Hillbrook Way
Pensacola FL 32503

To Whom it May Concern,

Our records indicate that a check was mailed to you in relation to a Tax Deed case. The Escambia County check referenced below has not been cashed. State law requires us to report and remit the funds to the State if you have not claimed your property. Please contact us no later than two weeks from the date of this letter. We can reissue the check upon request. You can contact me at 850-595-4813 or email me at taxdeeds@escambiaclerk.com.

Tax Deed case #:	Payable to:	Check #	Amount:
2019 TD 01923	Christopher Wade	900033431	$80.00

If no response is received from you within two weeks from the date of this letter, we will report and remit your monies to the State of Florida Unclaimed Properties Division. If you have any questions, please contact Mylinda Johnson at 850-595-4813.

Sincerely,
Pam Childers, Clerk of the Circuit Court
By: _____
Mylinda Johnson, Deputy Clerk