CERTIFICATION OF TAX DEED APPLICATION

Sections 197.502 and 197.542, Florida Statutes

FLORIDA

DR-513
Rule 12D-16.002 F.A.C
Effective 07/19

0423-03

Part 1: Tax Deed Application Information			
Applicant Name Applicant Address	TLGFY, LLC CAPITAL ONE, N.A., AS COLLATER PO BOX 54347 NEW ORLEANS, LA 70154	Application date	Jul 14, 2022
Property description	SOTO ANICETO 714 LASALLE WAY PENSACOLA, FL 32505 714 LASALLE WAY 05-3808-000 LT 13 BLK 9 EASTMONT UNIT NO 2 PB 5 P 31 OR 8130 P 1979	Certificate #	2020 / 2555
		Date certificate issued	06/01/2020

Part 2: Certificates Owned by Applicant and Filed with Tax Deed Application

Column 1 Certificate Number	Column 2 Date of Certificate Sale	Column 3 Face Amount of Certificate	Column 4 Interest	Column 5: Total (Column 3 + Column 4)
# 2020/2555	06/01/2020	792.23	39.61	831.84
			➔Part 2: Total*	**831.84**

Part 3: Other Certificates Redeemed by Applicant (Other than County)

Column 1 Certificate Number	Column 2 Date of Other Certificate Sale	Column 3 Face Amount of Other Certificate	Column 4 Tax Collector's Fee	Column 5 Interest	Total (Column 3 + Column 4 + Column 5)
# 2022/2202	06/01/2022	890.65	6.25	44.53	941.43
# 2021/2025	06/01/2021	819.72	6.25	40.99	866.96
				Part 3: Total*	**1,808.39**

Part 4: Tax Collector Certified Amounts (Lines 1-7)

1. Cost of all certificates in applicant's possession and other certificates redeemed by applicant (*Total of Parts 2 + 3 above)	2,640.23
2. Delinquent taxes paid by the applicant	0.00
3. Current taxes paid by the applicant	0.00
4. Property information report fee	200.00
5. Tax deed application fee	175.00
6. Interest accrued by tax collector under s.197.542, F.S. (see Tax Collector Instructions, page 2)	0.00
7. **Total Paid** (Lines 1-6)	3,015.23

I certify the above information is true and the tax certificates, interest, property information report fee, and tax collector's fees have been paid, and that the property information statement is attached.

Sign here: _____
Signature, Tax Collector or Designee

Escambia, Florida

Date July 27th, 2022

Send this certification to the Clerk of Court by 10 days after the date signed. See Instructions on Page 2

Part 5: Clerk of Court Certified Amounts (Lines 8-14)	
8. Processing tax deed fee	
9. Certified or registered mail charge	
10. Clerk of Court advertising, notice for newspaper, and electronic auction fees	
11. Recording fee for certificate of notice	
12. Sheriff's fees	
13. Interest (see Clerk of Court Instructions, page 2)	
14. **Total Paid** (Lines 8-13)	
15. Plus one-half of the assessed value of homestead property, if applicable under s. 197.502(6)(c), F.S.	
16. Statutory opening bid (total of Lines 7, 14, 15, and 16 if applicable)	

Sign here: _____ Date of sale 04/03/2023
Signature, Clerk of Court or Designee

INSTRUCTIONS 7 6.25

Tax Collector (complete Parts 1-4)

Part 2: Certificates Owned by Applicant and Filed with Tax Deed Application
Enter the Face Amount of Certificate in Column 3 and the Interest in Column 4 for each certificate number. Add Columns 3 and 4 and enter the amount in Column 5.

Part 3: Other Certificates Redeemed by Applicant (Other than County)
Total. Add the amounts in Columns 3, 4 and 5

Part 4: Tax Collector Certified Amounts (Lines 1-7)

Line 1, enter the total of Part 2 plus the total of Part 3 above.

Total Paid, Line 7: Add the amounts of Lines 1-6

Line 6, Interest accrued by tax collector. Calculate the 1.5 percent interest accrued from the month after the date of application through the month this form is certified to the clerk. Enter the amount to be certified to the clerk on **Line 6**. The interest calculated by the tax collector stops before the interest calculated by the clerk begins. See Section 197.542, F.S., and Rule 12D-13.060(3), Florida Administrative Code.

The tax collector's interest for redemption at the time of the tax deed application is a cost of redemption, which encompasses various percentages of interest on certificates and omitted or delinquent taxes under Section 197.502, F.S. This interest is calculated before the tax collector calculates the interest in Section 197.542, F.S.

Attach certified statement of names and addresses of persons who must be notified before the sale of the property. Send this form and any required attachments to the Clerk of Court within 10 days after it is signed.

Clerk of Court (complete Part 5)

Line 13: Interest is calculated at the rate of 1.5 percent per month starting from the first day of the month after the month of certification of this form through the last day of the month in which the sale will be held. Multiply the calculated rate by the total of **Line 7**, minus **Line 6**, plus **Lines 8** through **12**. Enter the amount on **Line 13**.

Line 14: Enter the total of Lines 8-13. Complete Lines 15-18, if applicable.

APPLICATION FOR TAX DEED

Section 197.502, Florida Statutes

512
R. 12/16

Application Number: 2200524

To: Tax Collector of ESCAMBIA COUNTY, Florida

I,
TLGFY, LLC CAPITAL ONE, N.A., AS COLLATER
PO BOX 54347
NEW ORLEANS, LA 70154,
hold the listed tax certificate and hereby surrender the same to the Tax Collector and make tax deed application thereon:

Account Number	Certificate No.	Date	Legal Description
05-3808-000	2020/2555	06-01-2020	LT 13 BLK 9 EASTMONT UNIT NO 2 PB 5 P 31 OR 8130 P 1979

I agree to:

- pay any current taxes, if due and
- redeem all outstanding tax certificates plus interest not in my possession, and
- pay all delinquent and omitted taxes, plus interest covering the property.
- pay all Tax Collector's fees, property information report costs, Clerk of the Court costs, charges and fees, and Sheriff's costs, if applicable.

Attached is the tax sale certificate on which this application is based and all other certificates of the same legal description which are in my possession.

Electronic signature on file
TLGFY, LLC CAPITAL ONE, N.A., AS COLLATER
PO BOX 54347
NEW ORLEANS, LA 70154

Applicant's signature

07-14-2022
Application Date

Chris Jones
Escambia County Property Appraiser

Real Estate Search **Tangible Property Search** **Sale List**

Nav. Mode ◉Account ○Parcel ID

Printer Friendly Version

General Information

Parcel ID: 102S301001013009
Account: 053808000
Owners: SOTO ANICETO DE SOTO HILDA VASQUEZ TRUSTEES FOR SOTO REVOCABLE LIVING TRUST DATED 01-19-2022
Mail: 4317 MARTHA AVE PENSACOLA, FL 32506
Situs: 714 LASALLE WAY 32505
Use Code: SINGLE FAMILY RESID
Taxing Authority: COUNTY MSTU
Tax Inquiry: Open Tax Inquiry Window

Tax Inquiry link courtesy of Scott Lunsford
Escambia County Tax Collector

Assessments

Year	Land	Imprv	Total	Cap Val
2021	$5,000	$42,594	$47,594	$47,594
2020	$4,500	$39,142	$43,642	$43,642
2019	$4,500	$36,948	$41,448	$41,448

Disclaimer

Market Value Breakdown Letter

Tax Estimator

File for New Homestead Exemption Online

Sales Data

Sale Date	Book	Page	Value	Type	Official Records (New Window)
01/19/2022	8705	830	$100	TR	
07/09/2019	8130	1979	$33,500	WD	
02/07/2019	8043	520	$100	OT	
11/26/2018	8002	343	$100	QC	
08/11/2014	7210	167	$100	QC	
04/1990	2847	220	$100	WD	
09/1989	2768	231	$100	WD	
08/1989	2740	580	$100	CT	
08/1986	2266	662	$29,900	WD	

Official Records Inquiry courtesy of Pam Childers
Escambia County Clerk of the Circuit Court and Comptroller

2021 Certified Roll Exemptions

None

Legal Description

LT 13 BLK 9 EASTMONT UNIT NO 2 PB 5 P 31 OR 8130 P 1979 OR 8705 P 830

Extra Features

None

Parcel Information

Launch Interactive Map

Section Map Id:
46-1S-30-2

Approx. Acreage:
0.2388

Zoned:
MDR

Evacuation & Flood

Information
Open
Report

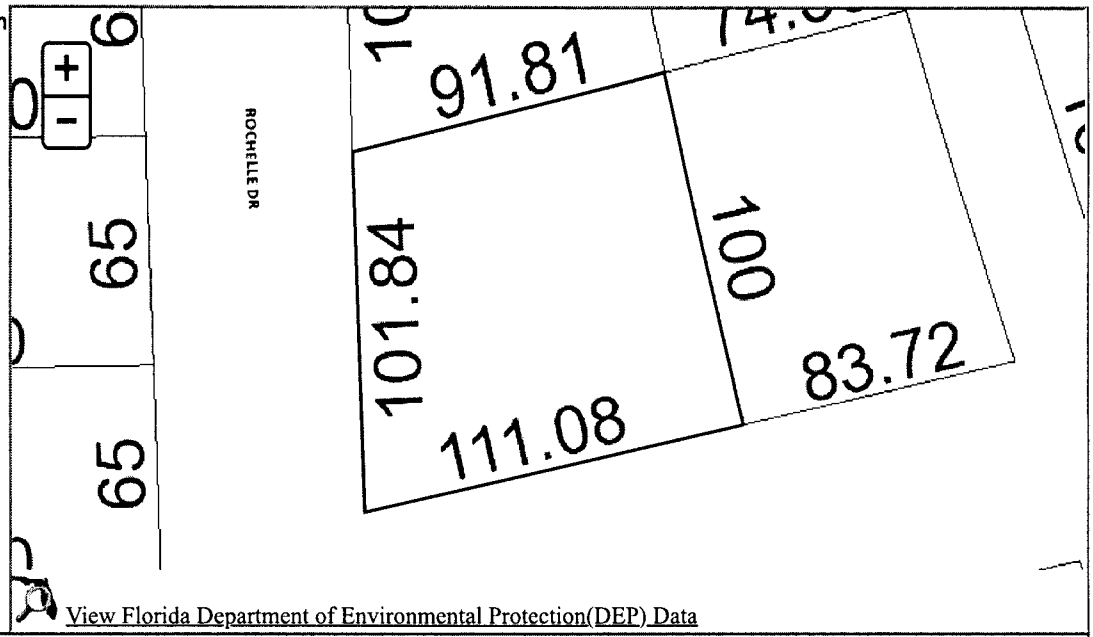

View Florida Department of Environmental Protection(DEP) Data

Buildings

Address:714 LASALLE WAY, Year Built: 1959, Effective Year: 1959, PA Building ID#: 74620

Structural Elements

DECOR/MILLWORK-*AVERAGE*
DWELLING UNITS-*1*
EXTERIOR WALL-*CONCRETE BLOCK*
EXTERIOR WALL-*SIDING-SHT.AVG.*
FLOOR COVER-*ASPHALT TILE*
FOUNDATION-*SLAB ON GRADE*
HEAT/AIR-*WALL/FLOOR FURN*
INTERIOR WALL-*DRYWALL-PLASTER*
NO. PLUMBING FIXTURES-*3*
NO. STORIES-*1*
ROOF COVER-*DIMEN/ARCH SHNG*
ROOF FRAMING-*GABLE*
STORY HEIGHT-*0*
STRUCTURAL FRAME-*MASONRY PIL/STL*

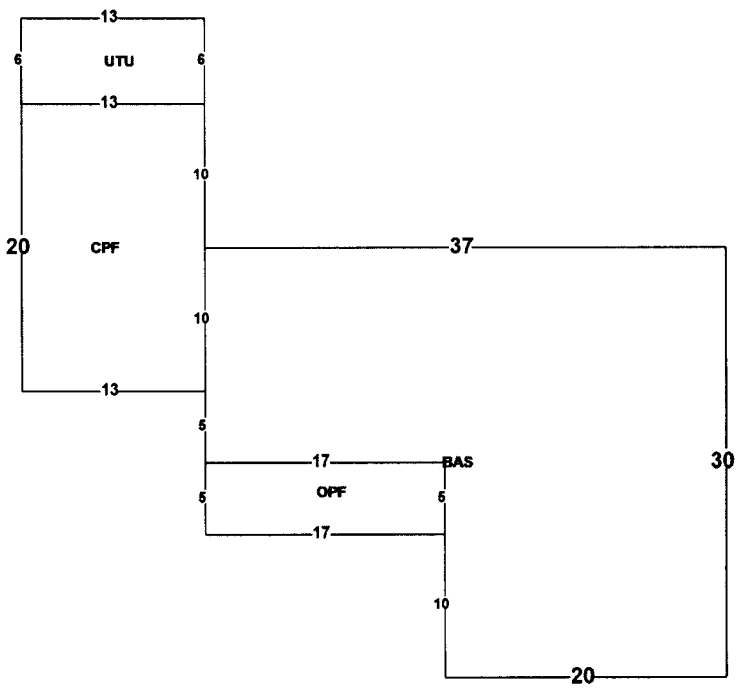

Areas - 1278 Total SF

BASE AREA - *855*
CARPORT FIN - *260*
OPEN PORCH FIN - *85*
UTILITY UNF - *78*

Images

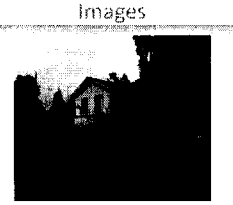

2/22/2022 12:00:00 AM

The primary use of the assessment data is for the preparation of the current year tax roll. No responsibility or liability is assumed for inaccuracies or errors.

Last Updated:08/01/2022 (tc.6776)

Pam Childers
CLERK OF THE CIRCUIT COURT
ESCAMBIA COUNTY FLORIDA
INST# 2022087216 8/26/2022 3:33 PM
OFF REC BK: 8848 PG: 808 Doc Type: TDN

NOTICE OF APPLICATION FOR TAX DEED

NOTICE IS HEREBY GIVEN, That **TLGFY LLC CAPITAL ONE NA AS COLLATER** holder of **Tax Certificate No. 02555**, issued the **1st** day of **June, A.D., 2020** has filed same in my office and has made application for a tax deed to be issued thereon. Said certificate embraces the following described property in the County of Escambia, State of Florida, to wit:

LT 13 BLK 9 EASTMONT UNIT NO 2 PB 5 P 31 OR 8130 P 1979

SECTION 10, TOWNSHIP 2 S, RANGE 30 W

TAX ACCOUNT NUMBER 053808000 (0423-03)

The assessment of the said property under the said certificate issued was in the name of

ANICETO SOTO

Unless said certificate shall be redeemed according to law, the property described therein will be sold to the highest bidder at public auction at 9:00 A.M. on the **first** Monday in the month of April, which is the **3rd day of April 2023.**

Dated this 24th day of August 2022.

In accordance with the AMERICANS WITH DISABILITIES ACT, if you are a person with a disability who needs special accommodation in order to participate in this proceeding you are entitled to the provision of certain assistance. Please contact Emily Hogg not later than seven days prior to the proceeding at Escambia County Government Complex, 221 Palafox Place Ste 110, Pensacola FL 32502. Telephone: 850-595-3793.

PAM CHILDERS
CLERK OF THE CIRCUIT COURT
ESCAMBIA COUNTY, FLORIDA

By:
Emily Hogg
Deputy Clerk

Pam Childers
CLERK OF THE CIRCUIT COURT
ESCAMBIA COUNTY FLORIDA
INST# 2022112583 11/18/2022 11:14 AM
OFF REC BK: 8892 PG: 934 Doc Type: RTD

RELEASE OF NOTICE OF APPLICATION FOR TAX DEED

Pursuant to § 197.502(5)(c), Florida Statutes, the Escambia County Clerk of Court fully releases the Notice of Tax Deed Application recorded at Official Records Book 8848, Page 808, of Escambia County, for the tax certificate, tax deed, and property described below:

Tax Certificate No. Certificate No. 02555, issued the 1st day of June, A.D., 2020

TAX ACCOUNT NUMBER: **053808000 (0423-03)**

DESCRIPTION OF PROPERTY:

LT 13 BLK 9 EASTMONT UNIT NO 2 PB 5 P 31 OR 8130 P 1979

SECTION 10, TOWNSHIP 2 S, RANGE 30 W

NAME IN WHICH ASSESSED: ANICETO SOTO

Dated this 18th day of November 2022.

PAM CHILDERS
CLERK OF THE CIRCUIT COURT
ESCAMBIA COUNTY, FLORIDA

By:
Emily Hogg
Deputy Clerk

PAM CHILDERS
CLERK OF THE CIRCUIT COURT
ARCHIVES AND RECORDS
CHILDSUPPORT
CIRCUIT CIVIL
CIRCUIT CRIMINAL
COUNTY CIVIL
COUNTY CRIMINAL
DOMESTIC RELATIONS
FAMILY LAW
JURY ASSEMBLY
JUVENILE
MENTAL HEALTH
MIS
OPERATIONAL SERVICES
PROBATE
TRAFFIC

COUNTY OF ESCAMBIA
OFFICE OF THE
CLERK OF THE CIRCUIT COURT

BRANCH OFFICES
ARCHIVES AND RECORDS
JUVENILE DIVISION
CENTURY

CLERK TO THE BOARD OF
COUNTY COMMISSIONERS
OFFICIAL RECORDS
COUNTY TREASURY
AUDITOR

PAM CHILDERS, CLERK OF THE CIRCUIT COURT
Tax Certificate Redeemed From Sale
Account: 053808000 Certificate Number: 002555 of 2020

Payor: ANICETO SOTO 714 LASALLE WAY PENSACOLA, FL 32505 **Date** 11/18/2022

Clerk's Check #	1	Clerk's Total	~~$517.56~~ $ 3,365.75
Tax Collector Check #	1	Tax Collector's Total	~~$3,428.54~~
		Postage	~~$60.00~~
		Researcher Copies	$0.00
		Recording	$10.00
		Prep Fee	$7.00
		Total Received	~~$4,023.10~~ $ 3,382.75

PAM CHILDERS
Clerk of the Circuit Court

Received By: J Boydon
Deputy Clerk

Escambia County Government Complex • 221 Palafox Place Ste 110 • PENSACOLA, FLORIDA 32502
(850) 595-3793 • FAX (850) 595-4827 • http://www.clerk.co.escambia.fl.us

PAM CHILDERS
CLERK OF THE CIRCUIT COURT
ARCHIVES AND RECORDS
CHILDSUPPORT
CIRCUIT CIVIL
CIRCUIT CRIMINAL
COUNTY CIVIL
COUNTY CRIMINAL
DOMESTIC RELATIONS
FAMILY LAW
JURY ASSEMBLY
JUVENILE
MENTAL HEALTH
MIS
OPERATIONAL SERVICES
PROBATE
TRAFFIC

COUNTY OF ESCAMBIA
OFFICE OF THE
CLERK OF THE CIRCUIT COURT

BRANCH OFFICES
ARCHIVES AND RECORDS
JUVENILE DIVISION
CENTURY

CLERK TO THE BOARD OF
COUNTY COMMISSIONERS
OFFICIAL RECORDS
COUNTY TREASURY
AUDITOR

Case # 2020 TD 002555
Redeemed Date 11/18/2022
Name ANICETO SOTO 714 LASALLE WAY PENSACOLA, FL 32505

Clerk's Total = TAXDEED	~~$517.56~~ $3,365.75
Due Tax Collector = TAXDEED	~~$3,428.54~~
Postage = TD2	~~$60.00~~
ResearcherCopies = TD6	$0.00
Release TDA Notice (Recording) = RECORD2	$10.00
Release TDA Notice (Prep Fee) = TD4	$7.00

• For Office Use Only

Date	Docket	Desc	Amount Owed	Amount Due	Payee Name

FINANCIAL SUMMARY

No Information Available - See Dockets

Search Property | Property Sheet | Lien Holder's | Sold To | Redeem | Forms | Courtview | Benchmark

PAM CHILDERS
CLERK OF THE CIRCUIT COURT
ESCAMBIA COUNTY, FLORIDA

Tax Deed - Redemption Calculator

Account: 053808000 Certificate Number: 002555 of 2020

Redemption: No | Application Date: 7/14/2022 | Interest Rate: 18%

	Final Redemption Payment ESTIMATED	Redemption Overpayment ACTUAL
	Auction Date 4/3/2023	Redemption Date 11/18/2022
Months	9	4
Tax Collector	$3,015.23	$3,015.23
Tax Collector Interest	$407.06	$180.91
Tax Collector Fee	$6.25	$6.25
Total Tax Collector	$3,428.54	$3,202.39 T.C.
Record TDA Notice	$17.00	$17.00
Clerk Fee	$119.00	$119.00
Sheriff Fee	$120.00	$120.00 –
Legal Advertisement	$200.00	$200.00 –
App. Fee Interest	$61.56	$27.36
Total Clerk	$517.56	$483.36 C.H.
Release TDA Notice (Recording)	$10.00	$10.00
Release TDA Notice (Prep Fee)	$7.00	$7.00
Postage	$60.00	$0.00
Researcher Copies	$0.00	$0.00
Total Redemption Amount	$4,023.10	$3,702.75 -120-200
		$3,382.75
	Repayment Overpayment Refund Amount	$320.35
Book/Page	8848	808

perdido
title & abstract, inc.

PROPERTY INFORMATION REPORT

3050 Concho Drive, Pensacola, Florida 32507 | Phone: 850-466-3077

THE ATTACHED REPORT IS ISSUED TO:

SCOTT LUNSFORD, ESCAMBIA COUNTY TAX COLLECTOR

TAX ACCOUNT #: **05-3808-000** CERTIFICATE #: **2020-2555**

THIS REPORT IS NOT TITLE INSURANCE. THE LIABILITY FOR ERRORS OR OMISSIONS IN THIS REPORT IS LIMITED TO THE PERSON(S) EXPRESSLY IDENTIFIED BY NAME IN THE PROPERTY INFORMATION REPORT AS THE RECIPIENT(S) OF THE PROPERTY INFORMATION REPORT.

The attached Report prepared in accordance with the instructions given by the user named above includes a listing of the owner(s) of record of the land described herein together with current and delinquent ad valorem tax information and a listing and copies of all open or unsatisfied leases, mortgages, judgments and encumbrances recorded in the Official Record Books of Escambia County, Florida that appear to encumber the title to said land as listed on page 2 herein. It is the responsibility of the party named above to verify receipt of each document listed. If a copy of any document listed is not received, the office issuing this Report must be contacted immediately.

This Report is subject to: Current year taxes; taxes and assessments due now or in subsequent years; oil, gas, and mineral or any subsurface rights of any kind or nature; easements, restrictions and covenants of record; encroachments, overlaps, boundary line disputes, and any other matters that would be disclosed by an accurate survey and inspection of the premises.

This Report does not insure or guarantee the validity or sufficiency of any document attached, nor is it to be considered a title insurance policy, an opinion of title, a guarantee of title, or as any other form of guarantee or warranty of title.

Use of the term "Report" herein refers to the Property Information Report and the documents attached hereto.

Period Searched: **January 5, 2003 to and including January 5, 2023** Abstractor: **Pam Alvarez**

BY

Michael A. Campbell,
As President
Dated: January 16, 2023

PROPERTY INFORMATION REPORT
CONTINUATION PAGE

January 16, 2023
Tax Account #: **05-3808-000**

1. The Grantee(s) of the last deed(s) of record is/are: **ANICETO SOTO AND HILDA VASQUEZ DE SOTO AS TRUSTEES OF THE SOTO REVOCABLE LIVING TRUST**

   By Virtue of Deed to Trust recorded 1/19/2022 in OR 8705/830

2. The land covered by this Report is: **See Attached Exhibit "A"**

3. The following unsatisfied mortgages, liens, and judgments affecting the land covered by this Report appear of record:

   a. **NONE**

4. Taxes:

   Taxes for the year(s) NONE are delinquent.
   Tax Account #: 05-3808-000
   Assessed Value: $52,353.00
   Exemptions: NONE

5. We find the following HOA names in our search (if a condominium, the condo docs book and page are included for your review): **NONE**

Payment of any special liens/assessments imposed by City, County, and/or State.

Note: Escambia County and/or local municipalities may impose special liens/assessments. These liens/assessments are not discovered in a title search or shown above. These special assessments typically create a lien on real property. The entity that governs subject property must be contacted to verify payment status.

PERDIDO TITLE & ABSTRACT, INC.

PROPERTY INFORMATION REPORT

3050 Concho Drive, Pensacola, Florida 32507 | Phone 850-466-3077

Scott Lunsford
Escambia County Tax Collector
P.O. Box 1312
Pensacola, FL 32591

CERTIFICATION: TITLE SEARCH FOR TDA

TAX DEED SALE DATE: **APR 3, 2023**

TAX ACCOUNT #: **05-3808-000**

CERTIFICATE #: **2020-2555**

In compliance with Section 197.522, Florida Statutes, the following is a list of names and addresses of those persons, firms, and/or agencies having legal interest in or claim against the above-described property. The above-referenced tax sale certificate is being submitted as proper notification of tax deed sale.

YES	NO	
☐	☒	**Notify City of Pensacola, P.O. Box 12910, 32521**
☐	☒	**Notify Escambia County, 190 Governmental Center, 32502**
☐	☒	**Homestead for _2022_ tax year.**

ANICETO SOTO
714 LASALLE WAY
PENSACOLA, FL 32505

ANICETO SOTO AND HILDA VASQUEZ DE SOTO AS TRUSTEES OF THE SOTO REVOCABLE LIVING TRUST
4317 MARTHA AVENUE
PENSACOLA, FL 32506

Certified and delivered to Escambia County Tax Collector, this 16th day of January, 2023.

PERDIDO TITLE & ABSTRACT, INC.

BY: Michael A. Campbell, As It's President

NOTE: The above listed addresses are based upon current information available, but addresses are not guaranteed to be true or correct.

PROPERTY INFORMATION REPORT

January 16, 2023
Tax Account #:05-3808-000

LEGAL DESCRIPTION
EXHIBIT "A"

LT 13 BLK 9 EASTMONT UNIT NO 2 PB 5 P 31 OR 8130 P 1979

SECTION 10, TOWNSHIP 2 S, RANGE 30 W

TAX ACCOUNT NUMBER 05-3808-000(0423-03)

Recorded in Public Records 1/19/2022 2:06 PM OR Book 8705 Page 830, Instrument #2022006007, Pam Childers Clerk of the Circuit Court Escambia County, FL Recording $18.50 Deed Stamps $0.70

This instrument was prepared by
And should be returned to:

Scott Malleck, Esquire
Law Offices of Scott Malleck, P.A.
107 W. Gregory Street
Pensacola, FL 32502

DEED TO TRUST

THIS IDENTURE, made this 19th day of January, 2022, between Aniceto Soto, a married man, of the County of Escambia, State of Florida, hereinafter referred to as "Grantor", whose post office address is 4317 Martha Avenue, Pensacola, Florida 32506 and between, Aniceto Soto and Hilda Vasquez de Soto, as Trustees of the Soto Revocable Living Trust, dated this 19th day of January, 2022, hereinafter referred to as "Grantee", whose post office address is 4317 Martha Avenue, Pensacola, Florida 32506.

WITNESSETH, That said Grantor, for and in consideration of the sum of TEN AND NO/100 DOLLARS ($10.00), and other good and valuable considerations to said Grantor in hand paid by said Grantee, the receipt whereof is hereby acknowledged, has granted, bargained and sold to the Grantee, Aniceto Soto and Hilda Vasquez de Soto, as Trustees of the Soto Revocable Living Trust, by and between Aniceto Soto, as Grantor, all of his interest in the following described land, situate, lying and being in Escambia County, Florida, to wit:

Lot 13, Block 9, Eastmont Unit No. 2, a subdivision of Section 10, Township 2 South, Range 30 West, Escambia County, Florida, and as per plat recorded in Plat Book 5, Page 31 and deed recorded in OR Book 8130, Page 1979 (Instrument #2019062112) of the Public Records of Escambia County, Florida.

Parcel Identification No.: 102S301001013009

Subject to taxes for the current year, zoning ordinances and restrictions, limitations and easements of record.

And said Grantor does hereby fully warrant the title to said land, and will defend the same against the lawful claims of all persons whomsoever. Grantor of the trust has conferred on the power and authority to protect, conserve, sell, lease, encumber, or otherwise manage and dispose of the real property described in this instrument.

This deed was prepared based upon information provided by the parties hereto and without the benefit of a title examination. By the delivery (by GRANTOR and acceptance by GRANTEE) of this deed, the GRANTOR and GRANTEE agree to indemnify and hold harmless the preparer of this deed from any and all liability arising by reason of matters which would have been revealed by a search of the Public Records.

This conveyance is subject to restrictions, reservations, limitations, and easements of record, if any, but this instrument shall not operate to re-impose the same.

*"Grantor" and "Grantee" are used for singular or plural, as context requires.

This instrument was prepared by
And should be returned to:

Scott Malleck, Esquire
Law Offices of Scott Malleck, P.A.
107 W. Gregory Street
Pensacola, FL 32502

IN WITNESS WHEREOF, the said first party has signed and sealed these presents the day and year first above written.

Signed, sealed and delivered
in the presence of:

GRANTORS:

Aniceto Soto

Address: 4317 Martha Avenue

Pensacola, Florida 32506

WITNESSES:

(Lorin Jackson)

Address: 107 W. Gregory Street
Pensacola, Florida 32502

(Delaney Busto)

Address: 107 W. Gregory Street
Pensacola, Florida 32502

STATE OF FLORIDA)
COUNTY OF ESCAMBIA)

I HEREBY CERTIFY that on this day, before me, an officer duly authorized to administer oaths and take acknowledgements, personally appeared Aniceto Soto, who is [X] personally known to me or who have [ ] produced the State-Issued Identification as identification and who acknowledged before me that they executed the foregoing instrument.

Witness my hand and official seal in the County and State last aforesaid this 19th day of January, 2022.

Notary Signature and Official Seal

Notary Public State of Florida
Scott A. Malleck
My Commission HH 024031
Expires 07/27/2024