19-210

Tax Collector's Certification

CTY-513

Tax Deed Application Number
1800676

Date of Tax Deed Application
Aug 28, 2018

This is to certify that **TLGFY, LLC CAPITAL ONE, N.A., AS COLLATER**, holder of **Tax Sale Certificate Number 2016 / 7961**, Issued the 1st Day of June, 2016 and which encumbers the following described property in the county of Escambia County , State of Florida, to wit: **13-0988-500**

Cert Holder:
TLGFY, LLC CAPITAL ONE, N.A., AS COLLATER
PO BOX 54347
NEW ORLEANS, LA 70154

Property Owner:
D D D & S ENTERPRISES INC
215 W BELMONT ST
PENSACOLA, FL 32501
LTS 8 9 10 AND N 90 FT OF LT 11 BLK 6 BELMONT TRAC T OR 7287 P 1410 CA 95

has surrendered same in my office and made written application for tax deed in accordance with Florida Statutes. I certify that the following tax certificates, interest, ownership and encumbrance report fee, and Tax Collector's fees have been paid, or if the certificate is held by the County, all appropriate fees have been deposited.

Certificates owned by applicant and filed in connection with this application:

Certificate Year/Number	Account Number	Sale Date	Face Amount of Certificate	Interest	Total
2016/7961	13-0988-500	06/01/2016	3,092.55	154.63	3,247.18

Certificates redeemed by applicant or included (County) in connection with this tax deed application:

Certificate Year/Number	Account Number	Sale Date	Face Amount of Certificate	Tax Collector's Fee	Interest	Total
2018/7945	13-0988-500	06/01/2018	4,277.37	6.25	213.87	4,497.49

Amounts Certified by Tax Collector (Lines 1-7):	**Total Amount Paid**
1. Total of all Certificates in Applicant's Possession and Cost of the Certificates Redeemed by Applicant	7,744.67
2. Total of Delinquent Taxes Paid by Tax Deed Applicant	0.00
3. Total of Current Taxes Paid by Tax Deed Applicant	0.00
4. Ownership and Encumbrance Report Fee	200.00
5. Tax Deed Application Fee	175.00
6. Total Interest Accrued by Tax Collector Pursuant to Section 197.542, F.S.	
7. Total (Lines 1 - 6)	8,119.67
Amounts Certified by Clerk of Court (Lines 8-15):	**Total Amount Paid**
8. Clerk of Court Statutory Fee for Processing Tax Deed	
9. Clerk of Court Certified Mail Charge	
10. Clerk of Court Advertising Charge	
11. Clerk of Court Recording Fee for Certificate of Notice	
12. Sheriff's Fee	
13. Interest Computed by Clerk of Court Pursuant to Section 197.542, F.S.	
14. Total (Lines 8 - 13)	
15. One-half Assessed Value of Homestead Property, if Applicable per F.S.	
16. Other Outstanding Certificates and Delinquent Taxes Not Included in this Application,	
17. Statutory (Opening) Bid; Total of Lines 7, 14, 15 (if applicable) and 16 (if	
18. Redemption Fee	6.25
19. Total Amount to Redeem	

Done this the 4th day of September, 2018 Scott Lunsford, Tax Collector of Escambia County

Date of Sale: March 4, 2019 By

*This certification must be surrendered to the Clerk of the Circuit Court no later than ten (10) days after this date.
13-0988-500 2016

APPLICATION FOR TAX DEED

Section 197.502, Florida Statutes

512
R. 12/16

Application Number: 1800676

To: Tax Collector of ESCAMBIA COUNTY, Florida

I,
TLGFY, LLC CAPITAL ONE, N.A., AS COLLATER
PO BOX 54347
NEW ORLEANS, LA 70154,
hold the listed tax certificate and hereby surrender the same to the Tax Collector and make tax deed application thereon:

Account Number	Certificate No.	Date	Legal Description
13-0988-500	2016/7961	06-01-2016	LTS 8 9 10 AND N 90 FT OF LT 11 BLK 6 BELMONT TRAC T OR 7287 P 1410 CA 95

I agree to:

- pay any current taxes, if due and
- redeem all outstanding tax certificates plus interest not in my possession, and
- pay all delinquent and omitted taxes, plus interest covering the property.
- pay all Tax Collector's fees, ownership and encumbrance report costs, Clerk of the Court costs, charges and fees, and Sheriff's costs, if applicable.

Attached is the tax sale certificate on which this application is based and all other certificates of the same legal description which are in my possession.

Electronic signature on file
TLGFY, LLC CAPITAL ONE, N.A., AS COLLATER
PO BOX 54347
NEW ORLEANS, LA 70154

Applicant's signature

08-28-2018
Application Date

Chris Jones
Escambia County Property Appraiser

Navigate Mode ◉Account ○Reference

Printer Friendly Version

General Information

Reference:	000S009010080006
Account:	130988500
Owners:	D D D & S ENTERPRISES INC
Mail:	215 W BELMONT ST PENSACOLA, FL 32501
Situs:	215 W BELMONT ST 32501
Use Code:	MULTI-FAMILY >=10
Units:	12
Taxing Authority:	PENSACOLA CITY LIMITS
Tax Inquiry:	Open Tax Inquiry Window

Tax Inquiry link courtesy of Scott Lunsford
Escambia County Tax Collector

Assessments

Year	Land	Imprv	Total	Cap Val
2018	$116,640	$112,851	$229,491	$222,767
2017	$93,744	$110,144	$203,888	$202,516
2016	$72,000	$112,106	$184,106	$184,106

Disclaimer

Amendment 1/Portability Calculations

› File for New Homestead Exemption Online

Sales Data

Sale Date	Book	Page	Value	Type	Official Records (New Window)
01/21/2015	7287	1410	$73,000	QC	View Instr
11/2003	5290	1311	$225,000	WD	View Instr
07/2000	4585	1856	$100	WD	View Instr
01/1978	1254	228	$60,500	WD	View Instr
01/1975	930	150	$100	WD	View Instr

Official Records Inquiry courtesy of Pam Childers
Escambia County Clerk of the Circuit Court and Comptroller

2018 Certified Roll Exemptions

None

Legal Description

LTS 8 9 10 AND N 90 FT OF LT 11 BLK 6 BELMONT TRACT
OR 7287 P 1410 CA 95

Extra Features

None

Parcel Information

Launch Interactive Map

Section Map Id:
CA095

Approx. Acreage:
0.3306

Zoned:
R-NCB

Evacuation & Flood Information
Open Report

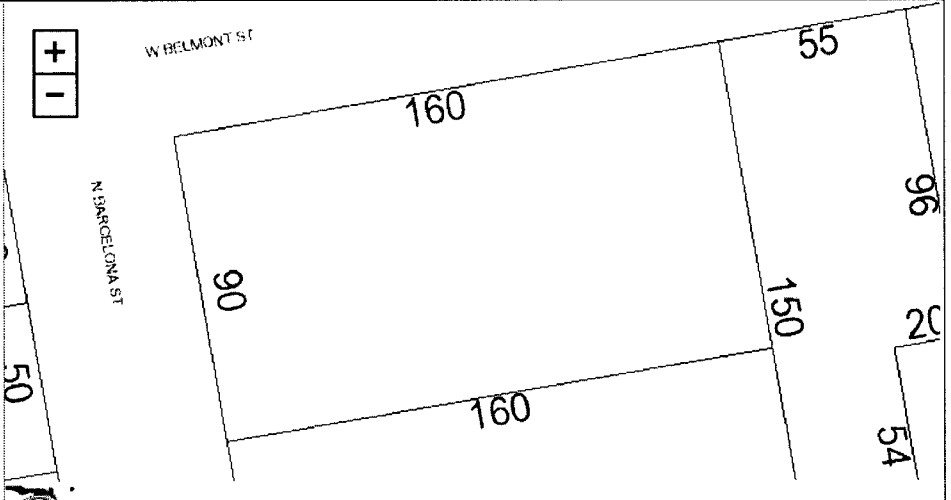

View Florida Department of Environmental Protection(DEP) Data

Buildings

Address:215 W BELMONT ST, Year Built: 1923, Effective Year: 1950

Structural Elements

DECOR/MILLWORK-AVERAGE
DWELLING UNITS-2
EXTERIOR WALL-ASBESTOS SIDING

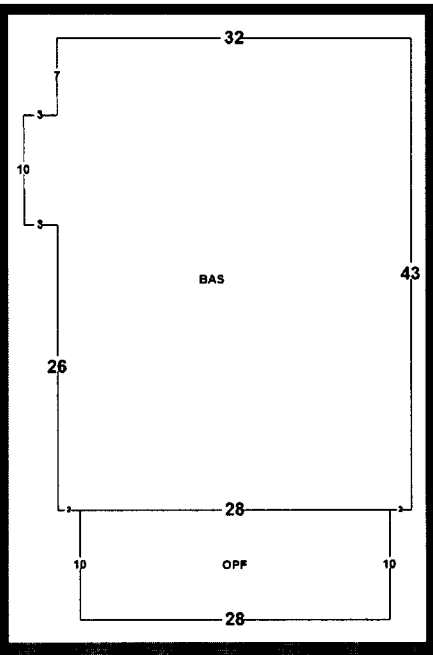

Areas - 1686 Total SF

Address:320 N BARCELONA ST, Year Built: 1901, Effective Year: 1950

Structural Elements

[illegible]
[illegible]
[illegible]
[illegible]
[illegible]
[illegible]
[illegible]
NO. PLUMBING FIXTURES - [illegible]
NO. STORIES - [illegible]
ROOF COVER - [illegible]
ROOF FRAMING - [illegible]
STORY HEIGHT - [illegible]
STRUCTURAL FRAME - WOOD FRAME

Areas - 6970 Total SF

BASE AREA - *2402*
BASEMENT UNF - *100*
OPEN PORCH FIN - *453*
UPPER STORY FIN - *3641*
WOOD DECK FIN - *374*

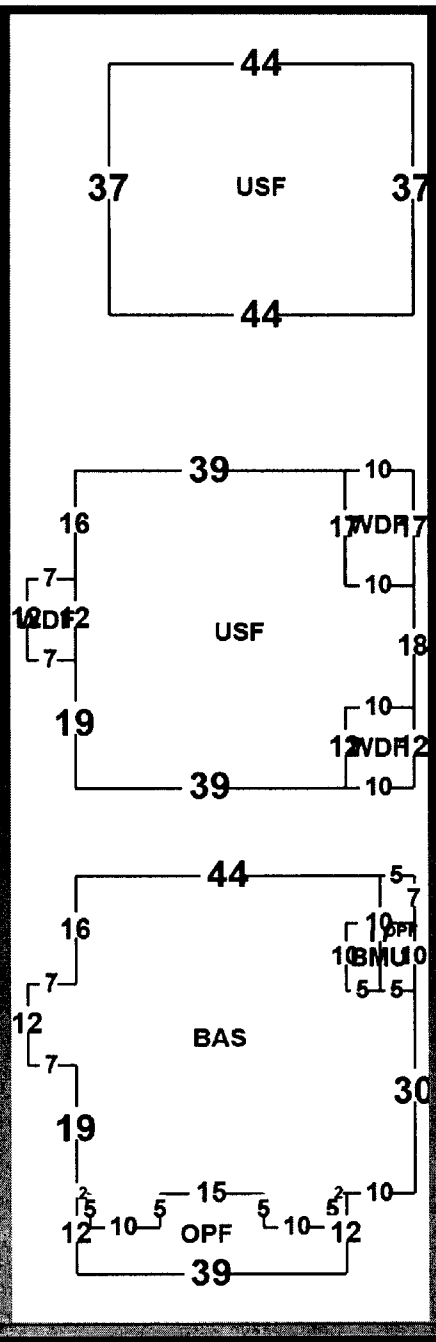

Address:219 W BELMONT ST, Year Built: 1928, Effective Year: 1950

Structural Elements

DECOR/MILLWORK-BELOW AVERAGE
DWELLING UNITS-1
EXTERIOR WALL-ASBESTOS SIDING
FLOOR COVER-PINE/SOFTWOOD
FOUNDATION-WOOD/NO SUB FLR
HEAT/AIR-UNIT HEATERS
INTERIOR WALL-PLASTER DIRECT
NO. PLUMBING FIXTURES-3
NO. STORIES-1
ROOF COVER-COMPOSITION SHG
ROOF FRAMING-GABLE
STORY HEIGHT-8
STRUCTURAL FRAME-WOOD FRAME

Areas - 558 Total SF

BASE AREA - *558*

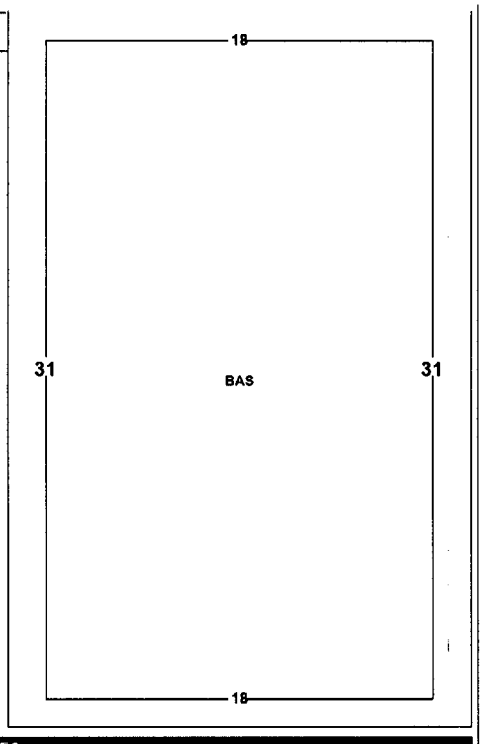

Address:217 W BELMONT ST, Year Built: 1933, Effective Year: 1950

Structural Elements

DECOR/MILLWORK-*AVERAGE*
DWELLING UNITS-*2*
EXTERIOR WALL-*ASBESTOS SIDING*
FLOOR COVER-*PINE/SOFTWOOD*
FOUNDATION-*SLAB ON GRADE*
HEAT/AIR-*UNIT HEATERS*
INTERIOR WALL-*PLASTER DIRECT*
NO. PLUMBING FIXTURES-*6*
NO. STORIES-*1*
ROOF COVER-*COMPOSITION SHG*
ROOF FRAMING-*GABLE-HI PITCH*
STORY HEIGHT-*8*
STRUCTURAL FRAME-*WOOD FRAME*

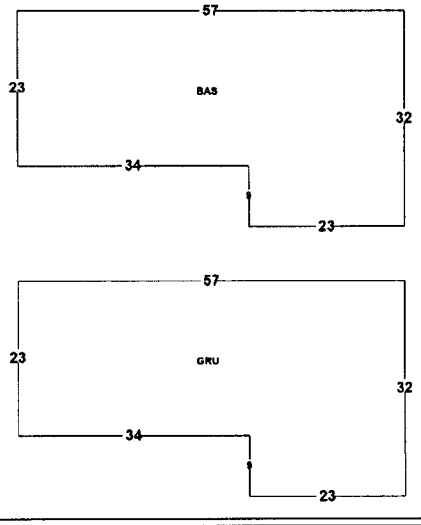

Areas - 3036 Total SF

BASE AREA - *1518*
GARAGE UNFIN - *1518*

Images

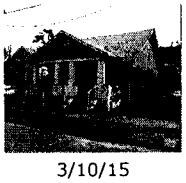
3/10/15

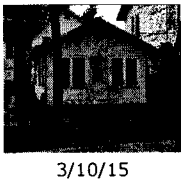
3/10/15


3/10/15

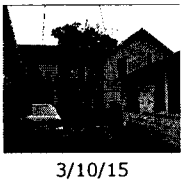
3/10/15

The primary use of the assessment data is for the preparation of the current year tax roll. No responsibility or liability is assumed for inaccuracies or errors.

Last Updated:09/11/2018 (tc.25230)

Scott Lunsford • Escambia County Tax Collector

EscambiaTaxCollector.com facebook.com/ECTaxCollector twitter.com/escambiatc

2018 Real Estate Property Taxes

Notice of Ad Valorem and Non-Ad Valorem Assessments

SCAN TO PAY ONLINE

ACCOUNT NUMBER	MILLAGE CODE	ESCROW CODE	PROPERTY REFERENCE NUMBER
13-0988-500	16		000S009010080006

D D D & S ENTERPRISES INC
215 W BELMONT ST
PENSACOLA, FL 32501

PROPERTY ADDRESS:
215 W BELMONT ST

EXEMPTIONS:
19-210
16/079461

PRIOR YEAR(S) TAXES OUTSTANDING

AD VALOREM TAXES

TAXING AUTHORITY	MILLAGE RATE	ASSESSED VALUE	EXEMPTION AMOUNT	TAXABLE AMOUNT	TAXES LEVIED
COUNTY	6.6165	222,767	0	222,767	1,473.94
PUBLIC SCHOOLS					
BY LOCAL BOARD	2.1250	229,491	0	229,491	487.67
BY STATE LAW	4.2000	229,491	0	229,491	963.86
PENSACOLA	4.2895	222,767	0	222,767	955.56
WATER MANAGEMENT	0.0338	222,767	0	222,767	7.53
M.S.T.U. LIBRARY	0.3590	222,767	0	222,767	79.97
TOTAL MILLAGE	17.6238			AD VALOREM TAXES	$3,968.53

LEGAL DESCRIPTION

LTS 8 9 10 AND N 90 FT OF LT 11 BLK 6 BELMONT
TRACT OR 7287 P 1410 CA 95

NON-AD VALOREM ASSESSMENTS

SW STORMWATER(CITY OF PENSACOLA)	230.45
NON-AD VALOREM ASSESSMENTS	$230.45

Pay online at EscambiaTaxCollector.com

Payments must be in U.S. funds drawn from a U.S. bank

COMBINED TAXES AND ASSESSMENTS $4,198.98

If Paid By	Nov 30, 2018	Dec 31, 2018	Jan 31, 2019	Feb 28, 2019	Mar 31, 2019
Please Pay	4,031.02	4,073.01	4,115.00	4,156.99	4,198.98

RETAIN FOR YOUR RECORDS

2018 Real Estate Property Taxes

DETACH HERE AND RETURN THIS PORTION WITH YOUR PAYMENT

Make checks payable to:

Scott Lunsford
Escambia County Tax Collector
P.O. BOX 1312
PENSACOLA, FL 32591

Pay online at EscambiaTaxCollector.com

ACCOUNT NUMBER
13-0988-500
PROPERTY ADDRESS
215 W BELMONT ST

D D D & S ENTERPRISES INC
215 W BELMONT ST
PENSACOLA, FL 32501

PRIOR YEAR(S) TAXES OUTSTANDING

Payments in U.S. funds from a U.S. bank

PAY ONLY ONE AMOUNT	
AMOUNT IF PAID BY	Nov 30, 2018 4,031.02
AMOUNT IF PAID BY	Dec 31, 2018 4,073.01
AMOUNT IF PAID BY	Jan 31, 2019 4,115.00
AMOUNT IF PAID BY	Feb 28, 2019 4,156.99
AMOUNT IF PAID BY	Mar 31, 2019 4,198.98

DO NOT FOLD, STAPLE, OR MUTILATE

1 130988500 2018 9

19-210

Search Property | Property Sheet | Lien Holder's | Redeem | Forms | Courtview | Benchmark

Redeemed From Sale

PAM CHILDERS
CLERK OF THE CIRCUIT COURT
ESCAMBIA COUNTY, FLORIDA

Tax Deed - Redemption Calculator

Account: 130988500 Certificate Number: 007961 of 2016

Redemption: Yes | Application Date: 08/28/2018 | Interest Rate: 18%

	Final Redemption Payment ESTIMATED	Redemption Overpayment ACTUAL
	Auction Date 03/04/2019	Redemption Date 12/10/2018
Months	7	4
Tax Collector	$8,119.67	$8,119.67
Tax Collector Interest	$852.57	$487.18
Tax Collector Fee	$6.25	$6.25
Total Tax Collector	$8,978.49	$8,613.10 T.C.
Record TDA Notice	$0.00	$0.00
Clerk Fee	$130.00	$130.00
Sheriff Fee	$120.00	$120.00
Legal Advertisement	$200.00	$200.00
App. Fee Interest	$47.25	$27.00
Total Clerk	$497.25	$477.00 C.H.
Release TDA Notice (Recording)	$0.00	$0.00
Release TDA Notice (Prep Fee)	$0.00	$0.00
Postage	$60.00	$0.00
Researcher Copies	$40.00	$0.00
Total Redemption Amount	$9,575.74	$9,090.10 -120 -200
	Repayment Overpayment Refund Amount	$485.64 $8,770.10
Book/Page		

Notes

19-210

PAM CHILDERS
CLERK OF THE CIRCUIT COURT
ARCHIVES AND RECORDS
CHILDSUPPORT
CIRCUIT CIVIL
CIRCUIT CRIMINAL
COUNTY CIVIL
COUNTY CRIMINAL
DOMESTIC RELATIONS
FAMILY LAW
JURY ASSEMBLY
JUVENILE
MENTAL HEALTH
MIS
OPERATIONAL SERVICES
PROBATE
TRAFFIC

COUNTY OF ESCAMBIA
OFFICE OF THE
CLERK OF THE CIRCUIT COURT

BRANCH OFFICES
ARCHIVES AND RECORDS
JUVENILE DIVISION
CENTURY

CLERK TO THE BOARD OF
COUNTY COMMISSIONERS
OFFICIAL RECORDS
COUNTY TREASURY
AUDITOR

PAM CHILDERS, CLERK OF THE CIRCUIT COURT
Tax Certificate Redeemed From Sale
Account: 130988500 Certificate Number: 007961 of 2016

Payor: DON L FERRARO 2410 COPTER RD PENSACOLA, FL 32514 **Date** 12/10/2018

Clerk's Check #	6609201963	Clerk's Total	~~$497.25~~ $8,770.10
Tax Collector Check #	1	Tax Collector's Total	~~$8,978.49~~
		Postage	$60.00
		Researcher Copies	$0.00
		Recording	$0.00
		Prep Fee	$0.00
		Total Received	~~$9,535.74~~ $8,770.10

PAM CHILDERS
Clerk of the Circuit Court

Received By: Whitney Coppage
Deputy Clerk

Escambia County Government Complex • 221 Palafox Place Ste 110 • PENSACOLA, FLORIDA 32502
(850) 595-3793 • FAX (850) 595-4827 • http://www.clerk.co.escambia.fl.us

PAM CHILDERS
CLERK OF THE CIRCUIT COURT
ARCHIVES AND RECORDS
CHILDSUPPORT
CIRCUIT CIVIL
CIRCUIT CRIMINAL
COUNTY CIVIL
COUNTY CRIMINAL
DOMESTIC RELATIONS
FAMILY LAW
JURY ASSEMBLY
JUVENILE
MENTAL HEALTH
MIS
OPERATIONAL SERVICES
PROBATE
TRAFFIC

COUNTY OF ESCAMBIA
OFFICE OF THE
CLERK OF THE CIRCUIT COURT

BRANCH OFFICES
ARCHIVES AND RECORDS
JUVENILE DIVISION
CENTURY

CLERK TO THE BOARD OF
COUNTY COMMISSIONERS
OFFICIAL RECORDS
COUNTY TREASURY
AUDITOR

Case # 2016 TD 007961
Redeemed Date 12/10/2018
Name DON L FERRARO 2410 COPTER RD PENSACOLA, FL 32514

Clerk's Total = TAXDEED	$497.25
Due Tax Collector = TAXDEED	$8,978.49
Postage = TD2	$60.00
ResearcherCopies = TD6	$0.00
Release TDA Notice (Recording) = RECORD2	$0.00
Release TDA Notice (Prep Fee) = TD4	$0.00

• **For Office Use Only**

Date	Docket	Desc	Amount Owed	Amount Due	Payee Name

FINANCIAL SUMMARY

No Information Available - See Dockets

Pam Childers

Clerk of the Circuit Court and Comptroller, Escambia County

Clerk of Courts • County Comptroller • Clerk of the Board of County Commissioners • Recorder •

December 17, 2018

TLGFY LLC CAPITAL ONE NA AS COLLATER
PO BOX 54347
NEW ORLEANS LA 70154

Dear Certificate Holder:

The records of this office show that an application for a tax deed had been made on the property represented by the numbered certificate listed below. The property redeemed prior to sale; therefore your application fees are now refundable.

TAX CERT	APP FEES	INTEREST	TOTAL
2016 TD 007961	$450.00	$27.00	$477.00
2016 TD 007477	$450.00	$33.75	$483.75

TOTAL $960.75

Very truly yours,

PAM CHILDERS
Clerk of Circuit Court

By:
Emily Hogg
Tax Deed Division

Tax Deeds • 221 Palafox Place • Suite 110 • Pensacola, FL 32502
Telephone 850-595-3793 • ehogg@EscambiaClerk.com

19-210

Redeemed

Southern Guaranty Title Company
4400 Bayou Boulevard, Suite 13B
Pensacola, Florida 32503
Telephone: 850-478-8121
Facsimile: 850-476-1437

PROPERTY INFORMATION REPORT

File No.: 14910

December 6, 2018

Escambia County Tax Collector
P.O. Box 1312
Pensacola, Florida 32591

Pursuant to your request, the Company has caused a search to be made of the Public Records of Escambia County, Florida, solely as revealed by records maintained from 12-06-1998, through 12-06-2018, and said search reveals the following:

1. THE GRANTEE(S) OF THE LAST DEED(S) OF RECORD IS:

   D D D & S Enterprises, Inc.

2. The land covered by this Report is:

   LEGAL DESCRIPTION IS ATTACHED HERETO AND MADE A PART HEREOF

3. The following unsatisfied mortgages, liens and judgments affecting the land covered by this Report appear of record:

   SEE CONTINUATION PAGE ATTACHED HERETO AND MADE A PART HEREOF

4. Taxes:

   SEE CONTINUATION PAGE ATTACHED HERETO AND MADE A PART HEREOF

This report is not title insurance. Pursuant to s. 627.7843, Florida Statutes, the maximum liability of the issuer of this property information report for errors or omissions in this property information report is limited to the amount paid for this property information report, and is further limited to the person(s) expressly identified by name in the property information report as the recipients(s) of the property information report.

THIS REPORT SHALL NOT BE USED FOR THE ISSUANCE OF TITLE INSURANCE.

Southern Guaranty Title Company

By: _____

December 6, 2018

PROPERTY INFORMATION REPORT
LEGAL DESCRIPTION

File No.: 14910 December 6, 2018

Lots 8, 9, 10 and North 90 feet of Lot 11, Block 6, Belmont Tract, City of Pensacola, Escambia County, Florida

PROPERTY INFORMATION REPORT
CONTINUATION PAGE

File No.: 14910 December 6, 2018

UNSATISFIED MORTGAGES, LIENS AND JUDGMENTS AFFECTING THE LAND COVERED BY THIS REPORT THAT APPEAR OF RECORD:

1. That certain mortgage executed by D D D & S Enterprises, Inc. in favor of Wells Fargo Bank, N.A. dated 03/10/2015 and recorded 04/01/2015 in Official Records Book 7323, page 954 of the public records of Escambia County, Florida, in the original amount of $205,000.00.

2. Taxes for the year 2015-2017 delinquent. The assessed value is $229,491.00. Tax ID 13-0988-500.

PLEASE NOTE THE FOLLOWING:

A. Subject to current year taxes.
B. Taxes and assessments due now or in subsequent years.
C. Subject to Easements, Restrictions and Covenants of record.
D. Encroachments, overlaps, boundary line disputes, and any other matters which would be disclosed by an accurate survey and inspection of the premises.
E. Oil, gas and mineral or any other subsurface rights of any kind or nature.

SOUTHERN GUARANTY TITLE COMPANY

4400 BAYOU BLVD., SUITE 13-B, CORDOVA SQUARE
PENSACOLA, FLORIDA 32503
TEL. (850) 478-8121 FAX (850) 476-1437
Email: rcsgt@aol.com

Scott Lunsford
Escambia County Tax Collector
P.O. Box 1312
Pensacola, FL 32591

CERTIFICATION: TITLE SEARCH FOR TDA

TAX DEED SALE DATE: 3-4-2019

TAX ACCOUNT NO.: 13-0988-500

CERTIFICATE NO.: 2016-7961

In compliance with Section 197.256, Florida Statutes, the following is a list of names and addresses of those persons, firms and/or agencies having legal interest in or claim against the above described property. The above referenced tax sale certificate is being submitted as proper notification of tax deed sale.

YES	NO	
___	X	Notify City of Pensacola, P.O. Box 12910, 32521
___	X	Notify Escambia County, 190 Governmental Center, 32502
___	X	Homestead for _____ tax year.

D D D & S Enterprises, Inc.
Don L. Ferraro, Reg. Agent
2410 Copter Rd.
Pensacola, FL 32514
and
215 W. Belmont St.
Pensacola, FL 32501

Wells Fargo Bank, N.A.
100 W. Washington St.
Phoenix, AZ 85003
and
420 Montgomery St.
San Francisco, CA 94163
and
Corporation Service Co., Reg. Agent
1201 Hays St.
Tallahassee, FL 32301

Certified and delivered to Escambia County Tax Collector, this 7th day of December, 2018.

SOUTHERN GUARANTY TITLE COMPANY

by: Richard S. Combs, President

NOTE: The above listed addresses are based upon current information available, but said addresses are not guaranteed to be true or correct.

Recorded in Public Records 01/21/2015 at 10:07 AM OR Book 7287 Page 1410, Instrument #2015004316, Pam Childers Clerk of the Circuit Court Escambia County, FL Recording $18.50 Deed Stamps $511.00

Prepared By: Don L. Ferraro
2410 Copter Rd
Pensacola, FL 32514

QUIT CLAIM DEED

Property Appraiser's Parcel Identification No. 000S009010080006

This Quit Claim Deed, Executed this 21st day of January, 2015,

By Don L. Ferraro and David L. Ferraro (first parties)

To D D D & S ENTERPRISES, INC. (second party)

Whose address is 215 W. Belmont Street, Pensacola, FL 32501
(wherever used herein the terms "first party" and "second party" shall include singular and plural, heirs, legal representatives and assigns of individuals, and the successors and assigns of corporations, wherever the context so admits or requires.)

Witnesseth, That the said first parties, for and in consideration of the sum of $10.00, in hand paid by the said second party, the receipt whereof is hereby acknowledged, does hereby remise, release and quit-claim unto the said second party forever, all the right, title, interest, claim and demand which the said first parties have in and to the following described lot, piece or parcel land, situate, lying and being in the County of Escambia, State of Florida

To Wit: Lots 8, 9, 10 and N 90 feet of Lot 11 Block 6 Belmont Tract City of Pensacola, Escambia County, Florida or 5290 P 1311 CA 95.

To have and to hold the same together with all and singular the appurtenances there unto belonging or in anywise appertaining, and all the estate, right, title, interest, lien, equity and claim whatsoever for the said first party, either in law or equity, to the only proper use, benefit and behoof of the said second party forever.

In Witness Whereof, the said first party has signed and sealed these presents the day and year first above written.

Signed, sealed, and delivered in the presence of :

Billie Sue Ferraro	David L. Ferraro
Witness Signature as to First Party	**Signature of First Party**
Billie Sue Ferraro	DAVID L. FERRARO
Printed Name	**Printed Name**

Meredith Thompson
Witness Signature as to First Party

Meredith Thompson
Printed Name

Billie Sue Ferraro
Witness Signature as to Co-First Party (if any)

Billie Sue Ferraro
Printed Name

Meredith Thompson
Witness Signature as to Co-First Party (if any)

Meredith Thompson
Printed Name

2410 Copter Rd.
Address

Pensacola, Fl-32514

Don L. Ferraro
Signature of Co-First Party (if any)

DON L. FERRARO
Printed Name

2410 Copter Rd.
Address

Pensacola, Fl. 32514

STATE OF FLORIDA-COUNTY OF ESCAMBIA

The foregoing instrument was acknowledged before me this 21st day of January, 2015, by Don L. Ferraro, who is personally known to me or has produced the following identification_____ and who did/did not take an oath.

NOTARY PUBLIC STATE OF FLORIDA
ELISABETH M. COLE
MY COMMISSION # EE 842220
EXPIRES: November 3, 2016
Bonded Thru Budget Notary Services

Elisabeth M. Cole
Signature of Notary/Deputy Clerk

Elisabeth M Cole
Printed Name

STATE OF Florida **-COUNTY OF** Escambia

The foregoing instrument was acknowledged before me this 21st day of January, 2015, by David L. Ferraro, who is personally known to me or has produced the following identification_____ and who did/did not take an oath.

NOTARY PUBLIC STATE OF FLORIDA
ELISABETH M. COLE
MY COMMISSION # EE 842220
EXPIRES: November 3, 2016
Bonded Thru Budget Notary Services

Elisabeth M. Cole
Signature of Notary/Deputy Clerk

Elisabeth M. Cole
Printed Name

Recorded in Public Records 04/01/2015 at 12:14 PM OR Book 7323 Page 954, Instrument #2015024707, Pam Childers Clerk of the Circuit Court Escambia County, FL Recording $171.50 MTG Stamps $717.50 Int. Tax $410.00

RECORDING REQUESTED BY:
Wells Fargo Bank, National Association
100 W. Washington Street, Phoenix, AZ 85003

WHEN RECORDED MAIL TO:
Wells Fargo Bank, National Association
Attn: Collateral Processing
BBSG - Boise Loan Operations LDI
P.O. Box 34656
San Antonio, TX 78265

Tax Account Number(s) of Real Property: 00-0s-00-9010-080-006

This Mortgage prepared by: Neco Morrison-Johnson
Name: BUSDIRECT BREF
Company: Wells Fargo Bank, National Association
Address: 100 W. Washington Street, Phoenix, AZ 85003

1001954453363004 90

MORTGAGE, ASSIGNMENT OF RENTS AND LEASES, SECURITY AGREEMENT AND FIXTURE FILING

Non-Homestead. Mortgagor represents and warrants that no Mortgagor nor any members of his/her family reside upon the property nor upon any lands contiguous thereto. The purpose of the foregoing statement is to establish that the property is not the homestead of Mortgagor.

This MORTGAGE, ASSIGNMENT OF RENTS AND LEASES, SECURITY AGREEMENT AND FIXTURE FILING (this "Mortgage") is executed as of March 10, 2015, by D D D & S Enterprises, Inc. a Florida corporation, ., whose address is 2410 COPTER RD, PENSACOLA, FL 32514 ("Mortgagor") to Wells Fargo Bank, National Association, whose address is 100 W. Washington Street, Phoenix, AZ 85003

("Mortgagee").

ARTICLE I. MORTGAGE

1.1 Grant. For the purposes and upon the terms and conditions in this Mortgage, Mortgagor irrevocably mortgages, gives, grants, sells, confirms, conveys and assigns to Mortgagee, with the right of entry and possession, Mortgagor's interest in: (a) all real property located in Escambia County, Florida, and described on Exhibit A attached hereto; (b) all easements, rights-of-way and rights used in connection with or as a means of access to any portion of said real property; (c) all tenements, hereditaments and appurtenances thereof and thereto; (d) all right, title and interest of Mortgagor, now owned or hereafter acquired, in and to any land lying within the right-of-way of any street, open or proposed, adjoining said real property, and any and all sidewalks, alleys and strips and gores of land adjacent to or used in connection with said real property; (e) all buildings, fixtures, improvements and landscaping now or hereafter erected or located on said real property; (f) all machinery, apparatus, equipment, fittings, fixtures, appliances, conduits and systems for generating or distributing air, water, heat, air conditioning, electricity, light, fuel or refrigeration, or for ventilating or sanitary purposes, or for the exclusion of vermin or insects, or for the removal of dust, refuse, sewage or garbage, or for fire prevention or extinguishing, all elevators escalators, lifts and dumbwaiters, all motors, engines, generators, compressors, pumps, lift stations, tanks, boilers, water heaters, furnaces and incinerators, all floor coverings, wall coverings, windows, storm doors, awnings, canopies, shades, screens, blinds, draperies and related hardware, and light fixtures, all plumbing, sinks, basins, toilets, faucets, pipes, sprinklers, disposals, laundry appliances and equipment and kitchen appliances and equipment, all alarm, safety, electronic, telephone, music, entertainment and communications equipment and systems, all janitorial, maintenance, cleaning, window washing, vacuuming, landscaping, pool and recreational equipment and supplies, and any other tangible personal property of every kind and nature whatsoever now or hereafter located on the real property or in any buildings or improvements located upon the real property, or any part thereof, and used or usable in connection with the construction of or any occupancy of any buildings on the real property or the operation of the real property, all additions thereto, and all substitutions and replacements therefor, but specifically excluding all equipment, machinery, furniture and other items of tangible personal property owned by tenants occupying buildings on the real property; (g) all development and concurrency rights, including, without limitation, all impact fee credits, sewer and water fee credits, sewer and water rights, all governmental or quasi-governmental licenses, permits, authorizations or approvals, zoning rights and other similar rights or interests which relate to the development, use or operation of, or that benefit or are appurtenant to, said real property; (h) all mineral rights, oil and gas rights, air rights, water or water rights, including without limitation, all wells, canals, ditches and reservoirs of any nature and all rights thereto, appurtenant to or associated with said real property, whether decreed or undecreed, tributary or non-tributary, surface or underground, appropriated or unappropriated, and all shares of stock in any water, canal, ditch or reservoir company, and all well permits, water service contracts, drainage rights and other evidences of any such rights; (i) all rights of the Mortgagor to any contracts relating to the real property, such as, but not limited to, all contracts with any general contractors or subcontractors with regard to improvements to be constructed on or improvements or refurbishments to be made to improvements already located on the real property, engineering contracts, architectural contracts, management contracts, etc. and to any engineering, architectural and other plans, drawings and specifications in connection therewith, and all of Mortgagor's rights in any construction and other materials intended to be incorporated in or used in connection with the real property or any improvements located or to be located on the real property, whether stored on the real property or elsewhere; (j) all payment, performance or other bonds; (k) any and all contracts now existing or hereafter made for the sale by Mortgagor of all or any portion of the real property, including any deposits paid by any purchasers (howsoever such deposits may be held) (provided, however, this subparagraph (k) shall not be deemed to authorize Mortgagor to enter into any such

contract to sell all or any portion of the real property); and (I) all interest or estate which Mortgagor now has or may hereafter acquire in said real property and all additions and accretions thereto, and all awards or payments made for the taking of all or any portion of said real property by eminent domain or any proceeding or purchase in lieu thereof, or any damage to any portion of said real property (collectively, the "Real Property"). The listing of specific rights or property shall not be interpreted as a limitation of general terms. This instrument shall constitute a security agreement to the extent any of the Real Property shall constitute fixtures, and Mortgagee shall have all the rights of a secured party under the Uniform Commercial Code as amended from time to time. In addition to recording this Mortgage in the real property records, Mortgagee may, at any time and without further authorization from Mortgagor, file a copy of this Mortgage as a financing statement.

1.2 Address. The address of the Real Property (if known) is: 215 W BELMONT ST, PENSACOLA, FL 32501, Assessor's Parcel No. 00-0s-00-9010-080-006. Neither the failure to designate an address nor any inaccuracy in the address designated shall affect the validity or priority of the lien of this Mortgage on the Real Property as described on Exhibit A. In the event of any conflict between the provisions of Exhibit A and said address, Exhibit A shall control.

ARTICLE II. OBLIGATIONS SECURED

2.1 Obligations Secured. Mortgagor makes this grant and assignment for the purpose of securing all of the following obligations (each, a "Secured Obligation" and collectively, the "Secured Obligations"):

(a) Payment to Mortgagee of all sums at any time owing and performance of all other obligations arising under or in connection with that certain promissory note, loan or credit agreement, confirmation letter and disclosure, or other evidence of debt (the "Note") dated as of March 10, 2015, in the maximum principal amount of Two Hundred Five Thousand and 00/100 Dollars ($205,000.00), with interest as provided therein, executed by D D D & S ENTERPRISES, INC. and payable to Mortgagee or its order, on or before March 15, 2030, plus any future advances as described herein, together with the payment and performance of any other indebtedness or obligations incurred in connection with the credit accommodation evidenced by the Note, whether or not specifically referenced therein.

(b) Payment and performance of all obligations of Mortgagor under this Mortgage, together with all advances, payments or other expenditures made by Mortgagee as or for the payment or performance of any such obligations of Mortgagor.

(c) Payment and performance of all obligations, if any, and the contracts under which they arise, which any rider attached to and recorded with this Mortgage recites are secured hereby.

(d) Payment to Mortgagee of all liability, whether liquidated or unliquidated, defined, contingent, conditional or of any other nature whatsoever, and performance of all other obligations, arising under any swap, derivative, foreign exchange or hedge transaction or arrangement (or other similar transaction or arrangement howsoever described or defined) at any time entered into with Mortgagee in connection with any Secured Obligation.

(e) All modifications, extensions and renewals of any of the Secured Obligations (including without limitation, (i) modifications, extensions or renewals at a different rate of interest, or (ii) deferrals or accelerations of the required principal payment dates or interest payment dates or both, in whole or in part), however evidenced, whether or not any such modification, extension or renewal is evidenced by a new or additional promissory note or notes, loan or credit agreement, confirmation letter and disclosure, change in terms agreement, or other evidence of debt.

Dispute and related claims are fully within that court's jurisdiction.

(h) Miscellaneous. To the maximum extent practicable, the AAA, the arbitrators and the parties shall take all action required to conclude any arbitration proceeding within 180 days of the filing of the Dispute with the AAA. No arbitrator or other party to an arbitration proceeding may disclose the existence, content or results thereof, except for disclosures of information by a party required in the ordinary course of its business or by applicable law or regulation. If more than one agreement for arbitration by or between the parties potentially applies to a Dispute, the arbitration provision most directly related to the documents between the parties or the subject matter of the Dispute shall control. This arbitration provision shall survive the repayment of the Note and the termination, amendment or expiration of any of the Documents or any relationship between the parties.

IN WITNESS WHEREOF, Mortgagor has executed this Mortgage as of the date first set forth above.

D D D & S Enterprises, Inc. a Florida corporation
Address: 2410 COPTER RD, PENSACOLA, FL ~~32514~~ 32514

By: _____
Name: DON FERRARO
Title: President

By: _____
Name: BILLIE FERRARO
Title: Secretary

[Corporate Seal]

CORPORATE ACKNOWLEDGMENT

STATE OF FLORIDA)
) SS
CITY/COUNTY OF Escambia)

The foregoing instrument was acknowledged before me this 11th day of March, 2015 by DON FERRARO, President of D D D & S Enterprises, Inc. a Florida corporation, a FL corporation, on behalf of the corporation. he or she is personally known to me or who has produced Dr. License as identification.

(Signature of Person Taking Acknowledgment)

Joseph R. Ard
State of Florida
MY COMMISSION # EE 171471
EXPIRES: February 28, 2016

Joseph R Ard
(Name of Acknowledger Typed, Printed or Stamped)

Notary Public
(Title or Rank)

EE171471
(Serial Number, if any)

CORPORATE ACKNOWLEDGMENT

STATE OF FLORIDA)
) SS
CITY/COUNTY OF Escambia)

The foregoing instrument was acknowledged before me this 11th day of March, 2015 by BILLIE FERRARO, Secretary of D D D & S Enterprises, Inc. a Florida corporation, a FL corporation, on behalf of the corporation. he or she is personally known to me or who has produced Fl Dr. License as identification.

(Signature of Person Taking Acknowledgment)

Joseph R. Ard
State of Florida
MY COMMISSION # EE 171471
EXPIRES: February 28, 2016

Joseph R Ard
(Name of Acknowledger Typed, Printed or Stamped)

Notary Public
(Title or Rank)

EE 171471
(Serial Number, if any)

EXHIBIT A

(Description of Property)

Exhibit A to Mortgage, Assignment of Rents and Leases, Security Agreement and Fixture Filing executed by D D D & S Enterprises, Inc. a Florida corporation, as Mortgagor, to Wells Fargo Bank, National Association, as Mortgagee, dated as of March 10, 2015 where Real Property or its address is commonly known as 215 W BELMONT ST, PENSACOLA, FL 32501, Assessor's Parcel No. 00-0s-00-9010-080-006.

Description of Property

Property located in Escambia, FL

To Wit: Lots 8, 9, 10 and N 90 feet of Lot 11 Block 6 Belmont Tract City of Pensacola, Escambia County, Florida or 5290 P 1311 CA 95.

AND BEING the same property conveyed to Don L. Ferraro, a married man and David L. Ferraro, a married man from Ronald D. Blue, Sr., Trustee of the Ronald D. Blue, Sr. Trust by Warranty Deed dated November 10, 2003 and recorded November 20, 2003 in Deed Book 5290, Page 1311; FURTHER CONVEYED to D D D & S Enterprises, Inc. from Don L. Ferraro and David L. Ferraro by Quit Claim Deed dated January 21, 2015 and recorded January 21, 2015 in Deed Book 7287, Page 1410.

Tax Parcel No. 00S009010080006