17-261

# Tax Collector's Certification

CTY-513

**Tax Deed Application Number**
1700089

**Date of Tax Deed Application**
Mar 08, 2017

This is to certify that **BRISINGER FUND 1, LLC**
**BRISINGER FUND 1, LLC**, holder of **Tax Sale Certificate Number 2014 / 4743**, Issued the 1st Day of June, 2014 and which encumbers the following described property in the county of Escambia County, State of Florida, to wit: **09-1269-100**

Cert Holder:
**BRISINGER FUND 1, LLC**
**BRISINGER FUND 1, LLC**
**1338 S FOOTHILL DRIVE #129SALT LAKE CITY, UT 84108**

Property Owner:
**HERRING TRACY M**
**2706 GRAINGER AVE**
**PENSACOLA, FL 32507**

BEG AT A POINT ON THE S LINE OF THE NE 1/4 OF SEC 1993 FT W OF THE SE COR OF NE 1/4 OF SEC AND BEINGFull legal attached.

has surrendered same in my office and made written application for tax deed in accordance with Florida Statutes. I certify that the following tax certificates, interest, ownership and encumbrance report fee, and Tax Collector's fees have been paid, or if the certificate is held by the County, all appropriate fees have been deposited.

Certificates owned by applicant and filed in connection with this application:

| Certificate Year/Number | Account Number | Sale Date | Face Amount of Certificate | Interest | Total |
|---|---|---|---|---|---|
| 2014/4743 | 09-1269-100 | 06/01/2014 | 2,470.75 | 123.54 | 2,594.29 |

Certificates redeemed by applicant or included (County) in connection with this tax deed application:

| Certificate Year/Number | Account Number | Sale Date | Face Amount of Certificate | Tax Collector's Fee | Interest | Total |
|---|---|---|---|---|---|---|
| 2016/4616 | 09-1269-100 | 06/01/2016 | 2,665.19 | 6.25 | 133.26 | 2,804.70 |
| 2015/5147 | 09-1269-100 | 06/01/2015 | 2,596.50 | 6.25 | 129.83 | 2,732.58 |

| **Amounts Certified by Tax Collector (Lines 1-7):** | **Total Amount Paid** |
|---|---|
| 1. Total of all Certificates in Applicant's Possession and Cost of the Certificates Redeemed by Applicant | 8,131.57 |
| 2. Total of Delinquent Taxes Paid by Tax Deed Applicant | 0.00 |
| 3. Total of Current Taxes Paid by Tax Deed Applicant | 2482.55 |
| 4. Ownership and Encumbrance Report Fee | 200.00 |
| 5. Tax Deed Application Fee | 175.00 |
| 6. Total Interest Accrued by Tax Collector Pursuant to Section 197.542, F.S. | |
| 7. Total (Lines 1 - 6) | 10,989.12 |

| **Amounts Certified by Clerk of Court (Lines 8-15):** | **Total Amount Paid** |
|---|---|
| 8. Clerk of Court Statutory Fee for Processing Tax Deed | |
| 9. Clerk of Court Certified Mail Charge | |
| 10. Clerk of Court Advertising Charge | |
| 11. Clerk of Court Recording Fee for Certificate of Notice | |
| 12. Sheriff's Fee | |
| 13. Interest Computed by Clerk of Court Pursuant to Section 197.542, F.S. | |
| 14. Total (Lines 8 - 13) | |
| 15. One-half Assessed Value of Homestead Property, if Applicable per F.S. | |
| 16. Other Outstanding Certificates and Delinquent Taxes Not Included in this Application, If Applicable Per Florida Statutes | |
| 17. Statutory (Opening) Bid; Total of Lines 7, 14, 15 (if applicable) and 16 (if | |
| 18. Redemption Fee | **6.25** |
| 19. Total Amount to Redeem | |

Done this the 14th day of March, 2017 Scott Lunsford, Tax Collector of Escambia County

Date of Sale: **5 June 2017** By Shirley Rich, CFCA
**Senior Deputy Tax Collector**

*This certification must be surrendered to the Clerk of the Circuit Court no later than ten (10) days after this date.

09-1269-100 2014

BEG AT A POINT ON THE S LINE OF THE NE 1/4 OF SEC 1993 FT W OF THE SE COR OF NE 1/4 OF SEC AND BEING AT THE W R/W LINE OF A 66 FT COUNTY RD (CALLED DRY RD) WLY ALG SD S LINE 379 7/10 FT N AT AN ANG 89 DEG 48 MIN 190 FT E AT AN ANG 90 DEG 12 MIN TO THE LEFT 379 7/10 FT TO W R/W LINE ON DRY RD S AT AN ANG 89 DEG 45 MIN TO THE LEFT AND ALG W R/W LINE OF SD RD 190 FT TO POB OR 6620 P 1284

# APPLICATION FOR TAX DEED

Section 197.502, Florida Statutes

512
R. 12/16

Application Number: 1700089

To: Tax Collector of ESCAMBIA COUNTY, Florida

I,

BRISINGER FUND 1, LLC
BRISINGER FUND 1, LLC
1338 S FOOTHILL DRIVE #129
SALT LAKE CITY, UT 84108,

hold the listed tax certificate and hereby surrender the same to the Tax Collector and make tax deed application thereon:

| Account Number | Certificate No. | Date | Legal Description |
|---|---|---|---|
| 09-1269-100 | 2014/4743 | 06-01-2014 | BEG AT A POINT ON THE S LINE OF THE NE 1/4 OF SEC 1993 FT W OF THE SE COR OF NE 1/4 OF SEC AND BEING AT THE W R/W LINE OF A 66 FT COUNTY RD (CALLED DRY RD) WLY ALG SD S LINE 379 7/10 FT N AT AN ANG 89 DEG 48 MIN 190 FT E AT AN ANG 90 DEG 12 MIN TO THE LEFT 379 7/10 FT TO W R/W LINE ON DRY RD S AT AN ANG 89 DEG 45 MIN TO THE LEFT AND ALG W R/W LINE OF SD RD 190 FT TO POB OR 6620 P 1284 |

I agree to:

- pay any current taxes, if due and
- redeem all outstanding tax certificates plus interest not in my possession, and
- pay all delinquent and omitted taxes, plus interest covering the property.
- pay all Tax Collector's fees, ownership and encumbrance report costs, Clerk of the Court costs, charges and fees, and Sheriff's costs, if applicable.

Attached is the tax sale certificate on which this application is based and all other certificates of the same legal description which are in my possession.

Electronic signature on file
BRISINGER FUND 1, LLC
BRISINGER FUND 1, LLC
1338 S FOOTHILL DRIVE #129
SALT LAKE CITY, UT 84108

Applicant's signature

03-08-2017
Application Date

# Chris Jones
# Escambia County Property Appraiser



## General Information

| | |
|---|---|
| **Reference:** | 251S311305001004 |
| **Account:** | 091269100 |
| **Owners:** | HERRING TRACY M |
| **Mail:** | 2706 GRAINGER AVE<br>PENSACOLA, FL 32507 |
| **Situs:** | 6845 TEMPLE LN 32526 |
| **Use Code:** | SINGLE FAMILY RESID |
| **Taxing Authority:** | COUNTY MSTU |
| **Tax Inquiry:** | Open Tax Inquiry Window |

Tax Inquiry link courtesy of Scott Lunsford
Escambia County Tax Collector

## Assessments

| Year | Land | Imprv | Total | Cap Val |
|---|---|---|---|---|
| 2016 | $47,310 | $114,441 | $161,751 | $161,751 |
| 2015 | $47,310 | $108,394 | $155,704 | $155,704 |
| 2014 | $47,310 | $103,776 | $151,086 | $151,086 |

Disclaimer

Amendment 1/Portability Calculations

★File for New Homestead Exemption Online

## Sales Data

| Sale Date | Book | Page | Value | Type | Official Records (New Window) |
|---|---|---|---|---|---|
| 07/19/2010 | 6620 | 1284 | $100 | CJ | View Instr |
| 02/11/2008 | 6285 | 1856 | $100 | OT | View Instr |
| 02/11/2008 | 6285 | 1855 | $100 | OT | View Instr |
| 11/1990 | 3386 | 568 | $77,800 | WD | View Instr |
| 04/1989 | 2692 | 537 | $80,000 | SC | View Instr |
| 04/1988 | 2545 | 150 | $60,000 | CT | View Instr |
| 02/1982 | 1618 | 898 | $75,000 | WD | View Instr |

Official Records Inquiry courtesy of Pam Childers
Escambia County Clerk of the Circuit Court and Comptroller

## 2016 Certified Roll Exemptions

None

## Legal Description

BEG AT A POINT ON THE S LINE OF THE NE 1/4 OF SEC 1993 FT W OF THE SE COR OF NE 1/4 OF SEC AND BEING AT THE W R/W...

## Extra Features

UTILITY BLDG

## Parcel Information

Launch Interactive Map

**Section Map Id:**
25-1S-31

**Approx. Acreage:**
1.6600

**Zoned:**
HDMU

**Evacuation & Flood Information**
Open Report

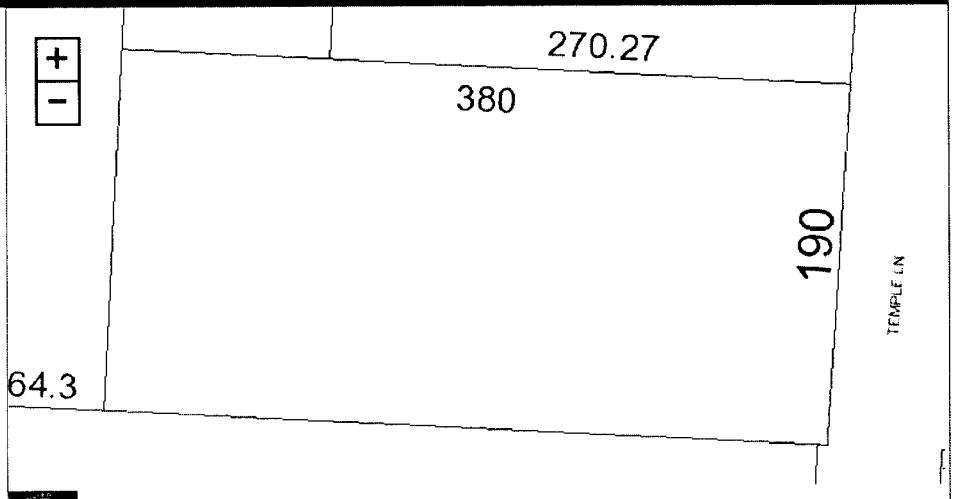


View Florida Department of Environmental Protection(DEP) Data

## Buildings

Address:6845 TEMPLE LN, Year Built: 1973, Effective Year: 1978

Structural Elements

**DECOR/MILLWORK**-*AVERAGE*
**DWELLING UNITS**-*1*
**EXTERIOR WALL**-*BRICK-FACE/VENEER*
**FLOOR COVER**-*HARDWOOD/PARQET*
**FOUNDATION**-*WOOD/SUB FLOOR*
**HEAT/AIR**-*CENTRAL H/AC*
**INTERIOR WALL**-*DRYWALL-PLASTER*
**NO. PLUMBING FIXTURES**-*6*
**NO. STORIES**-*1*
**ROOF COVER**-*DIMEN/ARCH SHNG*
**ROOF FRAMING**-*GABLE*
**STORY HEIGHT**-*0*
**STRUCTURAL FRAME**-*WOOD FRAME*

Areas - 2912 Total SF

**BASE AREA** - *2078*
**BASE SEMI FIN** - *528*
**OPEN PORCH FIN** - *18*
**SCRN PORCH UNF** - *288*

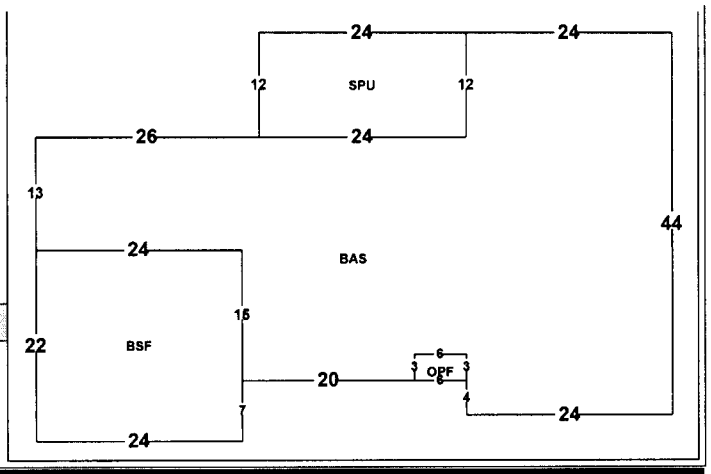


Images

9/22/16

The primary use of the assessment data is for the preparation of the current year tax roll. No responsibility or liability is assumed for inaccuracies or errors.

Last Updated:03/21/2017 (tc.63982)

17-261

# Southern Guaranty Title Company

4400 Bayou Boulevard, Suite 13B
Pensacola, Florida 32503
Telephone: 850-478-8121
Facsimile: 850-476-1437

## OWNERSHIP AND ENCUMBRANCE REPORT

File No.: 13467 March 17, 2017

Escambia County Tax Collector
P.O. Box 1312
Pensacola, Florida 32591

Pursuant to your request, the Company has caused a search to be made of the Public Records of Escambia County, Florida, solely as revealed by records maintained from 03-17-1997, through 03-17-2017, and said search reveals the following:

1. THE GRANTEE(S) OF THE LAST DEED(S) OF RECORD IS:

   Tracy Michael Herring

2. The land covered by this Report is:

   LEGAL DESCRIPTION IS ATTACHED HERETO AND MADE A PART HEREOF

3. The following unsatisfied mortgages, liens and judgments affecting the land covered by this Report appear of record:

   SEE CONTINUATION PAGE ATTACHED HERETO AND MADE A PART HEREOF

4. Taxes:

   SEE CONTINUATION PAGE ATTACHED HERETO AND MADE A PART HEREOF

The foregoing report is prepared and furnished for information only, is not intended to constitute or imply any opinion, warranty, guaranty, insurance, or similar assurance as to the status of title, and no determination has been made of the authenticity of any instrument described or referred to herein. The name search for the purposes of determining applicable judgments and liens is limited to the apparent record owner(s) shown herein, No attempt has been made to determine whether the land is subject to liens or assessments which are not shown as existing liens by the public records. The Company's liability hereunder shall not exceed the cost of this Report, or $1,000.00 whichever is less.

THIS REPORT SHALL NOT BE USED FOR THE ISSUANCE OF TITLE INSURANCE.

Southern Guaranty Title Company

By: _____ March 17, 2017

# OWNERSHIP AND ENCUMBRANCE REPORT
# LEGAL DESCRIPTION

File No.: 13467 March 17, 2017

**251S311305001004 - Full Legal Description**

BEG AT A POINT ON THE S LINE OF THE NE 1/4 OF SEC 1993 FT W OF THE SE COR OF NE 1/4 OF SEC AND BEING AT THE W R/W LINE OF A 66 FT COUNTY RD (CALLED DRY RD) WLY ALG SD S LINE 379 7/10 FT N AT AN ANG 89 DEG 48 MIN 190 FT E AT AN ANG 90 DEG 12 MIN TO THE LEFT 379 7/10 FT TO W R/W LINE ON DRY RD S AT AN ANG 89 DEG 45 MIN TO THE LEFT AND ALG W R/W LINE OF SD RD 190 FT TO POB OR 6620 P 1284

**OWNERSHIP AND ENCUMBRANCE REPORT**
**CONTINUATION PAGE**

File No.: 13467 March 17, 2017

UNSATISFIED MORTGAGES, LIENS AND JUDGMENTS AFFECTING THE LAND COVERED BY THIS REPORT THAT APPEAR OF RECORD:

1. Apparent Judgment filed by Donna M. Bloomer, C.P.A. DBA Bloomer, Geri & Company recorded in O.R. Book 7201, page 1172.

2. Taxes for the year 2013-2016 delinquent. The assessed value is $161,751.00. Tax ID 09-1269-100.

PLEASE NOTE THE FOLLOWING:

A. Subject to current year taxes.
B. Taxes and assessments due now or in subsequent years.
C. Subject to Easements, Restrictions and Covenants of record.
D. Encroachments, overlaps, boundary line disputes, and any other matters which would be disclosed by an accurate survey and inspection of the premises.
E. Oil, gas and mineral or any other subsurface rights of any kind or nature.

# SOUTHERN GUARANTY TITLE COMPANY

4400 BAYOU BLVD., SUITE 13-B, CORDOVA SQUARE
PENSACOLA, FLORIDA 32503
TEL. (850) 478-8121 FAX (850) 476-1437
Email: rcsgt@aol.com


Scott Lunsford
Escambia County Tax Collector
P.O. Box 1312
Pensacola, FL 32591

CERTIFICATION: TITLE SEARCH FOR TDA

TAX DEED SALE DATE: 6-5-2017

TAX ACCOUNT NO.: 09-1269-100

CERTIFICATE NO.: 2014-4743

In compliance with Section 197.256, Florida Statutes, the following is a list of names and addresses of those persons, firms and/or agencies having legal interest in or claim against the above described property. The above referenced tax sale certificate is being submitted as proper notification of tax deed sale.

| YES | NO | |
|---|---|---|
| ___ | X | Notify City of Pensacola, P.O. Box 12910, 32521 |
| ___ | X | Notify Escambia County, 190 Governmental Center, 32502 |
| ___ | X | Homestead for _____ tax year. |

Tracy Michael Herring
2706 Grainger Ave.
Pensacola, FL 32507

Unknown Tenants
6845 Temple Lane
Pensacola, FL 32526

Bonna M. Bloomer, CPA
dba Bloomer, Geri & Co.
Address unknown

Certified and delivered to Escambia County Tax Collector, this 17th day of March, 2017.

SOUTHERN GUARANTY TITLE COMPANY

by: Richard S. Combs, President

NOTE: The above listed addresses are based upon current information available, but said addresses are not guaranteed to be true or correct.

Recorded in Public Records 08/03/2010 at 04:18 PM OR Book 6620 Page 1284, Instrument #2010050095, Ernie Lee Magaha Clerk of the Circuit Court Escambia County, FL Recording $18.50 Deed Stamps $0.70

**PREPARED BY AND RETURN TO:**
Tracy Michael Herring, Executor for
The Estates of B.G. Herring & T.V. Herring
2706 Grainger Avenue , Pensacola, FL 32507
**FOLIO/PARCEL ID #: 2518311305001004**

(Space Above This Line for Recording Data)

# WARRANTY DEED

This Warranty Deed made this 19th day of July, 2010,
Between: Tracy Michael Herring, Executor for The Estate of Brenda Gail Herring and The Estate of Tracy Victor Herring and The Estate of Brenda Gail Herring and The Estate of Tracy Victor Herring
Whose address is 2706 Grainger Avenue, Pensacola, Florida 32507
hereinafter called the Grantors, and

Tracy Michael Herring, A Single Man
Whose address is: 2706 Grainger Avenue, Pensacola, FL 32507.
hereinafter called the Grantee:
(Whenever used herein the term "grantor and "grantee" include all the parties to this instrument and any of the heirs, any legal representatives and any assigns of individuals, as well as the successors and the assigns of any corporations.)

**WITNESSETH**, that the Grantor, for and in consideration of the sum of TEN and 00/100 Dollars **($10.00)** and other good and valuable considerations, to It in hand paid by the said Grantee, the receipt whereof is hereby acknowledged, hereby grants, bargains, sells, aliens, remises, releases, conveys and confirms unto the Grantee, their heirs and assigns forever, all of that certain land, situate, and lying in the County of **Escambia**, and State of Florida to wit:
– SEE ATTACHED SCHEDULE "A" FOR LEGAL DESCRIPTION –

PROPERTY ADDRESS: 6845 Temple Lane, Pensacola, FL. 32526
PARCEL IDENTIFICATION NUMBER: 2518311305001004

**SUBJECT TO all covenants, restrictions, easements, reservations of record, and taxes for current year and subsequent years, which are not yet due and payable. Together with all the tenements, hereditaments and appurtenances thereto belonging or in anywise appertaining.**
And the said Grantor hereby covenants with said Grantee that the Grantor is lawfully seized of said land in Fee Simple; that the Grantor has good right and lawful authority to sell and convey said land; that the Grantor hereby fully warrants the title to said land, free of encumbrances, and will defend the same against the lawful claims of all persons whomsoever; and that said land is free of all encumbrances except taxes accruing subsequent to **December 31, 2010,**
**TO HAVE AND TO HOLD**, the same in fee simple forever.
**IN WITNESS WHEREOF**, said grantor has signed and sealed these presents the day and year first above written.

***SIGNED, SEALED AND DELIVERED IN THE PRESENCE OF:***

Christine Francis
1st Witness
Print Name: Christine Francis

Tracy Michael Herring, Executor & Personal Representative for The Estate of Tracy Victor Herring

2nd Witness
Print Name: Shannon C. Thomas

Tracy Michael Herring, Executor & Personal Representative for The Estate of Brenda Gail Herring

State of Florida
County of Escambia

The foregoing instrument was acknowledged before me this 19 day of July, 2010, by Tracy Michael Herring who is personally known to me (X) or who has produced a current drivers license as identification

Notary Public
Commission No.
My Commission Expires: 4/19/11

MICHAEL WESTFALL
MY COMMISSION # DD665249
EXPIRES: April 19, 2011
1-800-3-NOTARY FL Notary Discount Assoc. Co.

(SEAL)

# EXHIBIT "A"

FOLIO/PARCEL ID #: 251S311305001004

LEGAL DESCRIPTION -

BEG AT A POINT ON THE S LINE OF THE NE ¼ OF SEC 1993 FT W OF THE SE COR OF NE ¼ OF SEC AND BEING AT THE W R/W LINE OF A 66 FT COUNTY RD (CALLED DRY RD) WLY ALG SD S LINE 379 7/10 FT N AT AN ANG 89 DEG 48 MIN 190 FT E AT AN ANG 90 DEG 12 MIN TO THE LEFT 379 7/10 FT TO W R/W LINE ON DRY RD S AT AN ANG 89 DEG 45 MIN TO THE LEFT AND ALG W R/W LINE OF SD RD 190 FT TO POB OR 3386 P 568

REC. FEE
ST. STP.
FED. STP.
TOTAL

State of Florida
Escambia County

# WARRANTY DEED

IN LIEU OF FORECLOSURE

3386 568

701 Navy Boulevard
GRANTEES' ADDRESS

**Know All Men by These Presents:** That We, Catherine Dugert & Irene Dugert

for and in consideration of Ten dollars other good and valuable considerations

( $10.00) DOLLARS

the receipt whereof is hereby acknowledged, do bargain, sell, convey and grant unto Tracy V. Herring and Brenda G. Herring, H & W

We, Our heirs, executors, administrators and assigns, forever, the following described real property, situate, lying and being in the State of Florida County of Escambia to wit:

A PORTION OF THE SOUTHWEST ¼ OF THE NORTHEAST ¼ OF SECTION 25, TOWNSHIP 1 SOUTH, RANGE 31 WEST, ESCAMBIA COUNTY, FLORIDA, DESCRIBED AS FOLLOWS: BEGIN AT A POINT OF THE SOUTH LINE OF THE NORTHEAST ¼ OF SAID SECTION 1993 FEET WEST OF THE SOUTHEAST CORNER OF SAID NORTHEAST ¼ OF SAID SECTION AND BEING AT THE WEST RIGHT OF WAY LINE OF A 66 FOOT COUNTY ROAD COMMONLY CALLED DRY ROAD; THENCE RUN WESTERLY ALONG SAID SOUTH LINE A DISTANCE OF 379.7 FEET; THENCE RUN NORTH AT AN ANGLE OF 89°48' TO THE LEFT, A DISTANCE OF 190 FEET; THENCE RUN NORTH AT AN ANGLE OF 90°12' TO THE LEFT, A DISTANCE OF 379.9 FEET TO THE WEST RIGHT OF WAY LINE ON DRY ROAD; THENCE SOUTH AT AN ANGLE OF 89°45' TO THE LEFT AND ALONG THE WEST RIGHT OF WAY LINE OF SAID ROAD. A DISTANCE OF 190 FEET, MORE OR LESS TO THE POINT OF BEGINNING.

D.S. PD. $ 54.60
DATE 6-25-93
JOE A. FLOWERS, COMPTROLLER
BY: D.C.
CERT. NO. 90-2043828-27-01

To have and to hold, unto the said grantees, Their heirs and assigns, forever

Together with all and singular the tenements, hereditaments and appurtenances thereto belonging or in anywise appertaining, free from all exemptions and right of homestead.

And we covenant that we are well seized of an indefeasable estate in fee simple in the said property, and have a good right to convey the same; that it is free of lien or encumbrance, except of record and that we, our heirs, executors and administrators, the said grantees, their heirs, executors, administrators and assigns, in the quiet and peaceable possession and enjoyment thereof, against all persons lawfully claiming the same, shall and will forever warrant and defend.

IN WITNESS WHEREOF, we have hereunto set our hands and seals this 14th day of November A.D. 1990

Signed, sealed and delivered in the presence of

Sally Chamberlain
Sally Chamberlain
Joanne Atwell
Joanne Atwell

Irene Dugert (SEAL)
Catherine Dugert (SEAL)
(SEAL)
(SEAL)

## State of Florida
Escambia County

This instrument prepared by:
Catherine Dugert
6845 Temple Lane
Pensacola, Fl 32507

Before the subscriber personally appeared Irene Dugert and Catherine Dugert his wife, known to me to be the individual s described by said name s in and who executed the foregoing instrument and acknowledged that they executed the same for the uses and purposes therein set forth.

Given under my official seal this 14th day of November, 1990

Notary Public

My Commission expires

NOTARY PUBLIC

CLERK FILE NO.

JUN 25 11 24 AM '93
JOE A. FLOWERS
COMPTROLLER
ESCAMBIA COUNTY

C 5 1 1 5 7

Recorded in Public Records 07/24/2014 at 03:09 PM OR Book 7201 Page 1172, Instrument #2014052810, Pam Childers Clerk of the Circuit Court Escambia County, FL

Filing # 16004498 Electronically Filed 07/16/2014 05:20:10 PM

IN THE COUNTY COURT IN AND FOR ESCAMBIA COUNTY, FLORIDA

DONNA M. BLOOMER, C.P.A., P.A.,
d/b/a BLOOMER, GERI & COMPANY,

Plaintiff,

vs.

CASE NO.: 2014 CC 001664
DIVISION: V

TRACY MICHAEL HERRING,

Defendant.
_____/

**FINAL JUDGMENT FOR PLAINTIFF**

THIS CAUSE is before the court for entry of final judgment. The defendant was served with the Complaint and, having failed to answer, a default was entered by the Clerk of Court on July 1, 2014. Having reviewed the file and the affidavit contained therein, and finding no cause to prevent entry of final judgment therein, it is hereby ORDERED AND ADJUDGED that plaintiff recover from defendant the principal sum of $13,500.00, prejudgment interest of $342.61, taxable costs of $350.00 for a total judgment of $14,192.61 which shall bear interest at 4.75% hereafter until paid and for which sum let execution issue.

IT IS FURTHER ORDERED that defendant complete the attached fact information sheet and return same to plaintiff's attorney with 45 days of the date of this judgment.

DONE AND ORDERED in Chambers at Pensacola, Escambia County, Florida this 18th day of July, 2014.

_____
County Court Judge

cc: Robert N. Heath, Jr., Robert@robertheathlaw.com, Sandra@robertheathlaw.com

Tracy Michael Herring 7-24-2014
2706 Grainger Ave.
Pensacola, FL 32507

**PAM CHILDERS**
CLERK OF THE CIRCUIT COURT
ARCHIVES AND RECORDS
CHILDSUPPORT
CIRCUIT CIVIL
CIRCUIT CRIMINAL
COUNTY CIVIL
COUNTY CRIMINAL
DOMESTIC RELATIONS
FAMILY LAW
JURY ASSEMBLY
JUVENILE
MENTAL HEALTH
MIS
OPERATIONAL SERVICES
PROBATE
TRAFFIC

**COUNTY OF ESCAMBIA**
**OFFICE OF THE**
**CLERK OF THE CIRCUIT COURT**

**BRANCH OFFICES**
**ARCHIVES AND RECORDS**
**JUVENILE DIVISION**
**CENTURY**

CLERK TO THE BOARD OF
COUNTY COMMISSIONERS
OFFICIAL RECORDS
COUNTY TREASURY
AUDITOR

**PAM CHILDERS, CLERK OF THE CIRCUIT COURT**
**Tax Certificate Redeemed From Sale**
**Account: 091269100 Certificate Number: 004743 of 2014**

**Payor: TRACY MICHAEL HERRING 2706 GRAINGER AVE PENSACOLA, FL 32507** **Date** 04/13/2017

| | | | | |
|---|---|---|---|---|
| Clerk's Check # | 1 | Clerk's Total | ~~$470.25~~ | 11,296.96 |
| Tax Collector Check # | 1 | Tax Collector's Total | ~~$11,489.88~~ | |
| | | Postage | ~~$10.52~~ | |
| | | Researcher Copies | $5.00 | |
| | | Total Received | ~~$11,975.65~~ | 11301.96 |

**PAM CHILDERS**
**Clerk of the Circuit Court**

**Received By** _____
**Deputy Clerk**

**Escambia County Government Complex • 221 Palafox Place Ste 110 • PENSACOLA, FLORIDA 32502**
**(850) 595-3793 • FAX (850) 595-4827 • http://www.clerk.co.escambia.fl.us**

**PAM CHILDERS**
CLERK OF THE CIRCUIT COURT
ARCHIVES AND RECORDS
CHILDSUPPORT
CIRCUIT CIVIL
CIRCUIT CRIMINAL
COUNTY CIVIL
COUNTY CRIMINAL
DOMESTIC RELATIONS
FAMILY LAW
JURY ASSEMBLY
JUVENILE
MENTAL HEALTH
MIS
OPERATIONAL SERVICES
PROBATE
TRAFFIC

**COUNTY OF ESCAMBIA**
**OFFICE OF THE**
**CLERK OF THE CIRCUIT COURT**

**BRANCH OFFICES**
**ARCHIVES AND RECORDS**
**JUVENILE DIVISION**
**CENTURY**

CLERK TO THE BOARD OF
COUNTY COMMISSIONERS
OFFICIAL RECORDS
COUNTY TREASURY
AUDITOR

**Case # 2014 TD 004743**
**Redeemed Date** 04/13/2017
**Name** TRACEY MICHAEL HERRING 2706 GRAINGER AVE PENSACOLA, FL 32507

| | | |
|---|---|---|
| Clerk's Total = TAXDEED | ~~$470.25~~ | |
| Due Tax Collector = TAXDEED | ~~$11,489.88~~ | 11,296.96 |
| Postage = TD2 | ~~$10.52~~ | |
| ResearcherCopies = TD6 | $5.00 | |

• **For Office Use Only**

| Date | Docket | Desc | Amount Owed | Amount Due | Payee Name |
|---|---|---|---|---|---|

**FINANCIAL SUMMARY**

No Information Available - See Dockets

Search Property | Property Sheet | Lien Holder's | Sold To | Redeem | Forms | Courtview | Benchmark

# PAM CHILDERS
# CLERK OF THE CIRCUIT COURT
# ESCAMBIA COUNTY, FLORIDA

## Tax Deed - Redemption Calculator

**Account: 091269100 Certificate Number: 004743 of 2014**

Redemption: No

Application Date: 03/08/2017

Interest Rate: 18%

| | Final Redemption Payment ESTIMATED | Redemption Overpayment ACTUAL |
|---|---|---|
| Auction Date | 06/05/2017 | |
| Redemption Date | | 04/13/2017 |
| Months | 3 | 1 |
| Tax Collector | $10,989.12 | $10,989.12 |
| Tax Collector Interest | $494.51 | $164.84 |
| Tax Collector Fee | $6.25 | $6.25 |
| Total Tax Collector | $11,489.88 | $11,160.21 TC |
| Clerk Fee | $130.00 | $130.00 |
| Sheriff Fee | $120.00 | $120.00 |
| Legal Advertisement | $200.00 | $200.00 |
| App. Fee Interest | $20.25 | ~~$6.75~~ |
| Total Clerk | $470.25 | $456.75 CH |
| Postage | $10.52 | $10.52 |
| Researcher Copies | $5.00 | $5.00 |
| Total Redemption Amount | $11,975.65 | $11,632.48 |
| | Repayment Overpayment Refund Amount | $343.17 |

Notes

# Pam Childers

Clerk of the Circuit Court and Comptroller, Escambia County

Clerk of Courts • County Comptroller • Clerk of the Board of County Commissioners • Recorder •


April 24, 2017

BRISINGER FUND 1 LLC
1338 S FOOTHILL DRIVE #129
SALT LAKE CITY UT 84108

Dear Certificate Holder:

The records of this office show that an application for a tax deed had been made on the property represented by the numbered certificate listed below. The property redeemed prior to sale; therefore your application fees are now refundable.

| TAX CERT | APP FEES | INTEREST | TOTAL |
|---|---|---|---|
| 2014 TD 001545 | $450.00 | $6.75 | $456.75 |
| 2014 TD 004743 | $450.00 | $6.75 | $456.75 |

**TOTAL $913.50**

Very truly yours,

PAM CHILDERS
Clerk of Circuit Court

By:
Emily Hogg
Tax Deed Division


Tax Deeds • 221 Palafox Place • Suite 110 • Pensacola, FL 32502
Telephone 850-595-3793 • OR@EscambiaClerk.com