FORM 513
(r.12/00)

TAX COLLECTOR'S CERTIFICATION

Application Date / Number
Apr 15, 2014 / 140050

This is to certify that the holder listed below of Tax Sale Certificate Number **2012 / 5784.0000** , issued the **1st** day of **June, 2012**, and which encumbers the following described property located in the County of Escambia, State of Florida to wit: **Parcel ID Number:** 09-2584-000

Certificate Holder:
PPF HOLDINGS III LTD.
U.S. BANK CUSTODIAN FOR PPF HO
P.O. BOX 645051
CINCINNATI, OHIO 45264

Property Owner:
HAZZARD JIMMY L & HAZZARD KATHRYN A
5999 PURSLEY AVE
PENSACOLA , FLORIDA 32526

Legal Description:
S 100 FT OF N 150 FT OF W 132 FT OF E 330 FT OF LT 3 OR 6509 P 1960

has surrendered same in my office and made written application for tax deed in accordance with Florida Statutes. I certify that the following tax certificates, interest, ownership and encumbrance report fee, and Tax Collector's fees have been paid:

CERTIFICATES OWNED BY APPLICANT AND FILED IN CONNECTION WITH THIS TAX DEED APPLICATION:

Cert. Year	Certificate Number	Date of Sale	Face Amt	T/C Fee	Interest	Total
2012	5784.0000	06/01/12	$547.21	$0.00	$34.09	$581.30

CERTIFICATES REDEEMED BY APPLICANT OR INCLUDED (COUNTY) IN CONNECTION WITH THIS APPLICATION:

Cert. Year	Certificate Number	Date of Sale	Face Amt	T/C Fee	Interest	Total
2013	5275.0000	06/01/13	$564.17	$6.25	$28.21	$598.63

1. Total of all Certificates in Applicant's Possession and Cost of the Certificates Redeemed by Applicant or Included (County)	$1,179.93
2. Total of Delinquent Taxes Paid by Tax Deed Application	$0.00
3. Total of Current Taxes Paid by Tax Deed Applicant (2013)	$518.53
4. Ownership and Encumbrance Report Fee	$250.00
5. Tax Deed Application Fee	$75.00
6. Total Certified by Tax Collector to Clerk of Court	$2,023.46
7. Clerk of Court Statutory Fee	
8. Clerk of Court Certified Mail Charge	
9. Clerk of Court Advertising Charge	
10. Sheriff's Fee	
11. _____	
12. Total of Lines 6 thru 11	$2,023.46
13. Interest Computed by Clerk of Court Per Florida Statutes.....(%)	
14. One-Half of the assessed value of homestead property. If applicable pursuant to section 197.502, F.S.	$27,447.00
15. Statutory (Opening) Bid; Total of Lines 12 thru 14	
16. Redemption Fee	$6.25
17. Total Amount to Redeem	

*Done this 15th day of April, 2014

TAX COLLECTOR, ESCAMBIA COUNTY, FLORIDA

By Candice Lewis

Date of Sale: October 6, 2014

* This certification must be surrendered to the Clerk of the Circuit Court no later than ten days after this date.

DR-512
R.05/88

Application Number: 140050

Notice to Tax Collector of Application for Tax Deed

TO: Tax Collector of Escambia County

In accordance with Florida Statutes, I,

PPF HOLDINGS III LTD.
U.S. BANK CUSTODIAN FOR PPF HO
P.O. BOX 645051
CINCINNATI, Ohio, 45264

holder of the following tax sale certificate hereby surrender same to the Tax Collector and make tax deed application thereon:

Certificate No.	Parcel ID Number	Date	Legal Description
5784.0000	09-2584-000	06/01/2012	S 100 FT OF N 150 FT OF W 132 FT OF E 330 FT OF LT 3 OR 6509 P 1960

2013 TAX ROLL
HAZZARD JIMMY L & HAZZARD KATHRYN A
5999 PURSLEY AVE
PENSACOLA , Florida 32526

I agree to pay all delinquent taxes, redeem all outstanding certificates not in my possession, pay any omitted taxes, and pay current taxes, if due, covering the land, and pay any interest earned (a) on tax certificates not in my possession, (b) on omitted taxes or (c) on delinquent taxes. I also agree to pay all Tax Collector's fees, ownership and encumbrance reports costs, Clerk of the Court costs, charges and fees and Sheriff's costs, if applicable. Attached is the above-mentioned tax sale certificate on which this application is based and all other certificates of the same legal description which are in my possession.

tda2012 (Taimur Jamil) — 04/15/2014

Applicant's Signature — Date

Chris Jones
Escambia County Property Appraiser

General Information

Reference:	012S313101000001
Account:	092584000
Owners:	HAZZARD JIMMY L & HAZZARD KATHRYN A
Mail:	5999 PURSLEY AVE PENSACOLA, FL 32526
Situs:	5999 PURSLEY AVE 32526
Use Code:	SINGLE FAMILY RESID
Taxing Authority:	COUNTY MSTU
Tax Inquiry:	Open Tax Inquiry Window

Tax Inquiry link courtesy of Janet Holley
Escambia County Tax Collector

2013 Certified Roll Assessment

Improvements:	$67,377
Land:	$11,400
Total:	$78,777
Save Our Homes:	$54,894

Disclaimer

Amendment 1/Portability Calculations

Sales Data

Sale Date	Book	Page	Value	Type	Official Records (New Window)
09/10/2009	6509	1960	$70,000	WD	View Instr
03/23/2009	6450	1668	$100	CT	View Instr
08/2006	5969	46	$146,900	WD	View Instr
03/2006	5870	1302	$110,000	WD	View Instr
09/1981	1577	491	$44,500	WD	View Instr
01/1969	466	681	$29,000	WD	View Instr

Official Records Inquiry courtesy of Pam Childers
Escambia County Clerk of the Circuit Court and Comptroller

2013 Certified Roll Exemptions

HOMESTEAD EXEMPTION

Legal Description

S 100 FT OF N 150 FT OF W 132 FT OF E 330 FT OF LT 3 OR 6509 P 1960

Extra Features

FRAME BUILDING
POOL

Parcel Information

Launch Interactive Map

Section Map Id:
01-2S-31-1

Approx. Acreage:
0.3000

Zoned:
R-2

Evacuation & Flood Information
Open Report

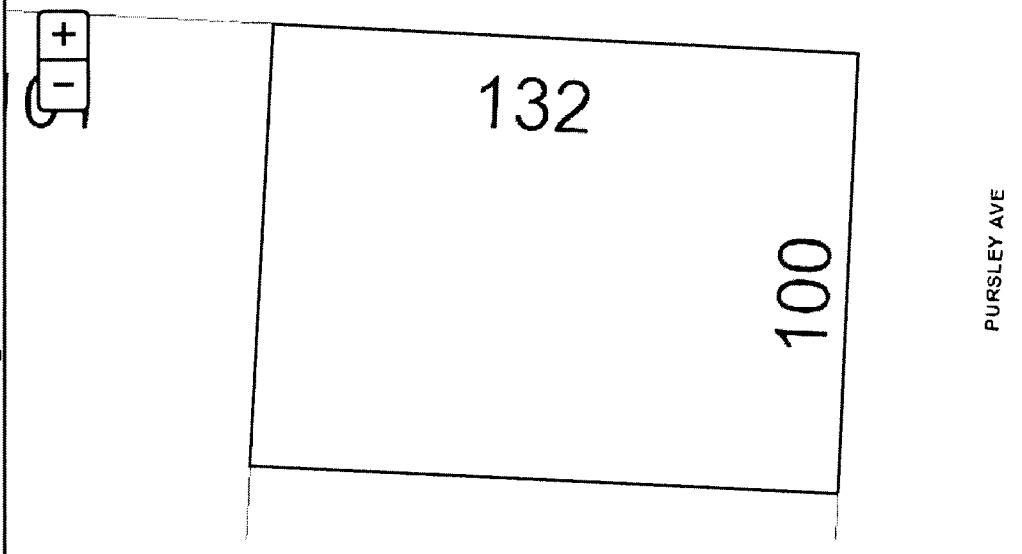

Buildings

Building 1 - Address:5999 PURSLEY AVE, Year Built: 1960, Effective Year: 1960

Structural Elements

DECOR/MILLWORK-*AVERAGE*
DWELLING UNITS-*1.00*
EXTERIOR WALL-*BRICK-FACE*
FLOOR COVER-*HARDWOOD/PARQET*
FOUNDATION-*WOOD/SUB FLOOR*
HEAT/AIR-*CENTRAL H/AC*
INTERIOR WALL-*DRYWALL-PLASTER*
NO. PLUMBING FIXTURES-*3.00*
NO. STORIES-*1.00*
ROOF COVER-*COMPOSITION SHG*
ROOF FRAMING-*HIP*
STRUCTURAL FRAME-*WOOD FRAME*

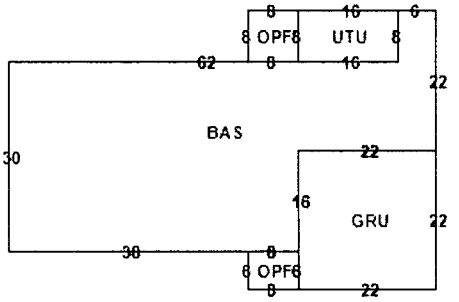

Areas - 2460 Total SF

BASE AREA - *1736*
GARAGE UNFIN - *484*
OPEN PORCH FIN - *112*
UTILITY UNF - *128*

Images

11/5/09

The primary use of the assessment data is for the preparation of the current year tax roll. No responsibility or liability is assumed for inaccuracies or errors.

Last Updated:04/24/2014 (tc.2269)

Southern Guaranty Title Company
4400 Bayou Boulevard, Suite 13B
Pensacola, Florida 32503
Telephone: 850-478-8121
Facsimile: 850-476-1437

14-693

OWNERSHIP AND ENCUMBRANCE REPORT

File No.: 11324 July 11, 2014

Escambia County Tax Collector
P.O. Box 1312
Pensacola, Florida 32591

Pursuant to your request, the Company has caused a search to be made of the Public Records of Escambia County, Florida, solely as revealed by records maintained from 07-11-1994, through 07-11-2014, and said search reveals the following:

1. THE GRANTEE(S) OF THE LAST DEED(S) OF RECORD IS:

   JImmy L. Hazzard and Kathryn A. Hazzard, husband and wife

2. The land covered by this Report is:

   LEGAL DESCRIPTION IS ATTACHED HERETO AND MADE A PART HEREOF

3. The following unsatisfied mortgages, liens and judgments affecting the land covered by this Report appear of record:

   SEE CONTINUATION PAGE ATTACHED HERETO AND MADE A PART HEREOF

4. Taxes:

   SEE CONTINUATION PAGE ATTACHED HERETO AND MADE A PART HEREOF

The foregoing report is prepared and furnished for information only, is not intended to constitute or imply any opinion, warranty, guaranty, insurance, or similar assurance as to the status of title, and no determination has been made of the authenticity of any instrument described or referred to herein. The name search for the purposes of determining applicable judgments and liens is limited to the apparent record owner(s) shown herein, No attempt has been made to determine whether the land is subject to liens or assessments which are not shown as existing liens by the public records. The Company's liability hereunder shall not exceed the cost of this Report, or $1,000.00 whichever is less.

THIS REPORT SHALL NOT BE USED FOR THE ISSUANCE OF TITLE INSURANCE.

Southern Guaranty Title Company

By: _____ July 11, 2014

OWNERSHIP AND ENCUMBRANCE REPORT
LEGAL DESCRIPTION

File No.: 11324 July 11, 2014

The South 100.00 feet of the North 150.00 feet of the West 132.00 feet of the East 330.00 feet of Government Lot 3, Section 1, Township 2 South, Range 31 West, Escambia County, Florida.

OWNERSHIP AND ENCUMBRANCE REPORT
CONTINUATION PAGE

File No.: 11324 July 11, 2014

UNSATISFIED MORTGAGES, LIENS AND JUDGMENTS AFFECTING THE LAND COVERED BY THIS REPORT THAT APPEAR OF RECORD:

1. Judgment filed by Monsanto Employees Federal Credit Union NKA Gulf Winds Federal Credit Union recorded in O.R. Book 6369, page 252.

2. Taxes for the year 2011-2013 delinquent. The assessed value is $54,894.00. Tax ID 09-2584-000.

PLEASE NOTE THE FOLLOWING:

A. Subject to current year taxes.
B. Taxes and assessments due now or in subsequent years.
C. Subject to Easements, Restrictions and Covenants of record.
D. Encroachments, overlaps, boundary line disputes, and any other matters which would be disclosed by an accurate survey and inspection of the premises.
E. Oil, gas and mineral or any other subsurface rights of any kind or nature.

SOUTHERN GUARANTY TITLE COMPANY

4400 BAYOU BLVD., SUITE 13-B, CORDOVA SQUARE
PENSACOLA, FLORIDA 32503
TEL. (850) 478-8121 FAX (850) 476-1437
Email: rcsgt@aol.com

Janet Holley
Escambia County Tax Collector
P.O. Box 1312
Pensacola, FL 32596

CERTIFICATION: TITLE SEARCH FOR TDA

TAX DEED SALE DATE: 10-6-2014

TAX ACCOUNT NO.: 09-2584-000

CERTIFICATE NO.: 2012-5784

In compliance with Section 197.256, Florida Statutes, the following is a list of names and addresses of those persons, firms and/or agencies having legal interest in or claim against the above described property. The above referenced tax sale certificate is being submitted as proper notification of tax deed sale.

YES	NO	
___	X	Notify City of Pensacola, P.O. Box 12910, 32521
___	X	Notify Escambia County, 190 Governmental Center, 32502
X	___	Homestead for 2013 tax year.

Jimmy L. Hazzard
Kathryn A. Hazzard
5999 Pursley Ave.
Pensacola, FL 32526

Gulf Winds Federal Credit Union
220 East Nine Mile Rd.
Pensacola, FL 32534

Certified and delivered to Escambia County Tax Collector,
this 14th day of July, 2014.

SOUTHERN GUARANTY TITLE COMPANY

by: Richard S. Combs, President

NOTE: The above listed addresses are based upon current information available, but said addresses are not guaranteed to be true or correct.

Recorded in Public Records 09/23/2009 at 10:54 AM OR Book 6509 Page 1960, Instrument #2009065491, Ernie Lee Magaha Clerk of the Circuit Court Escambia County, FL Recording $10.00 Deed Stamps $490.00

Return 11604-09-00480H6
North American Title Company
7380 Murrell Road, Suite 105
Melbourne, Florida 32940

This Instrument Prepared By:
Prepared by: Mark J. Loterstein, Esquire
North American Title Company
7380 Murrell Road, Suite 105
Melbourne, Florida 32940
Property Appraisers Folio Number:
012S313101000001

SPECIAL WARRANTY DEED

This indenture, made on the 10th day of September, 2009 by and between the Secretary of Veterans Affairs, an Officer of the United States of America, whose address is Department of Veterans Affairs, Washington, DC 20420, hereinafter referred to as Grantor, and Jimmy L. Hazzard and Kathryn A. Hazzard, husband and wife, whose post office address is 5999 Pursley Avenue, Pensacola, FL 32526, hereinafter called the Grantee(s):

(Wherever used herein the terms "grantor" and "grantee" include all the parties to this instrument and the heirs, legal representatives and assigns of individuals, and the successors and assigns of corporations)

WITNESSETH: That the grantor(s), for and in consideration of the sum of $10.00 (ten) and other valuable considerations, receipt whereof is hereby acknowledged, hereby grants, bargains, sells, aliens, remises, releases, conveys and confirms unto the grantee all that certain land situate in Brevard County, State of Florida, viz:

The South 100.0 feet of the North 150.0 feet of the West 132.0 feet of the East 330.0 feet of Government Lot 3, Section 1, Township 2 South, Range 31 West, Escambia County, Florida.

SUBJECT TO: covenants, conditions, restrictions, reservations, limitations, easements and agreements of record, if any; taxes and assessments for the year 2009 and subsequent years; and to all applicable zoning ordinances and/or restrictions and prohibitions imposed by governmental authorities, if any,

TOGETHER, with all the tenements, hereditaments and appurtenances thereto belonging or in anywise appertaining.
TO HAVE AND TO HOLD, the same in fee simple forever.

AND the grantor hereby covenants with said grantee that the grantor is lawfully seized of said land in fee simple; that the grantor has good right and lawful authority to sell and convey said land, and hereby warrants the title to said land and will defend the same against the lawful claims of all persons.

Pursuant to provisions of 38 U.S.C. 3720 (a)(6) the Secretary of Veterans Affairs does not seek to exercise exclusive jurisdiction over the within described property.

IN WITNESS WHEREOF, the said grantor has signed and sealed these presents the day and year first above written.
Signed, sealed and delivered in the presence of:

First Witness Signature
Stephanie Allen
Printed Signature

Second Witness Signature Tammie Jones
Printed Signature

Secretary of Veterans Affairs, An officer of the United States of America

By:
Its: Deo'Deshia Stovall, Asst. Secretary
Countrywide Pursuant to a delegation of authority contained in 38 C.F.R. § 36.4342(f)

STATE OF: Florida
COUNTY OF: Brevard

On this date, before me personally appeared Deo'Deshia Stovall, pursuant to a delegation of authority contained in 38 C.F.R. § 36.4342 (f), to me known to be the person who executed the foregoing instrument on behalf of the Secretary of Veterans Affairs, and acknowledged that he executed the same as the free act and deed of said Secretary.

In Witness Whereof, I have hereunto set my hand and affixed my official seal in the State of Texas aforesaid, this 10th day of September, 2009.

NOTARY PUBLIC, State of
Print Notary Name: Pennie Clayton
My Commission Expires: 2/29/2012

PENNIE CLAYTON
My Commission Expires
February 29, 2012

Recorded in Public Records 08/26/2008 at 12:30 PM OR Book 6369 Page 252, Instrument #2008064513, Ernie Lee Magaha Clerk of the Circuit Court Escambia County, FL Recording $10.00

OR BK 4342 PG1558
Escambia County, Florida
INSTRUMENT 98-557570

IN THE COUNTY COURT IN AND FOR ESCAMBIA COUNTY, FLORIDA

98 NOV 25 A 9:13

CLERK AND RECORDER
CIVIL DIVISION

MONSANTO EMPLOYEES CREDIT UNION,
220 E. Nine Mile Road
Pensacola, FL 32534

Plaintiff,

FINAL JUDGMENT AGAINST JIMMY HAZZARD

VS.

Case No. 98-1415-SP-11

JIMMY HAZZARD,
(SSN: [redacted]
222 North P Street
Pensacola, FL 32505-7909

Defendant.

RCD Dec 03, 1998 12:08 pm
Escambia County, Florida

Ernie Lee Magaha
Clerk of the Circuit Court
INSTRUMENT 98-557570

****

This cause having come before the Court upon default in a mediated/stipulated agreement, and the Court being fully advised in the premises, it is, therefore;

ORDERED AND ADJUDGED that the **Plaintiff** shall recover from the **Defendant(s)** the sum of $431.70 (includes costs and interest), that shall bear interest at the rate of 10% per annum, for which let execution issue.

DONE AND ORDERED in Chambers at Pensacola, Escambia County, Florida, this 24 day of November 1998.

Thomas E. Johnson
County Judge

Copies to:
Plaintiff
Defendant

Certified to be a true copy of the original on file in this office
Witness my hand and official seal
ERNIE LEE MAGAHA
Clerk of the Circuit Court
Escambia County, Florida
By: Christina Nelson D.C.
Date: August 11, 2008

"CERTIFIED TO BE A TRUE COPY
OF THE ORIGINAL ON FILE IN THIS OFFICE
WITNESS MY HAND AND OFFICIAL SEAL
ERNIE LEE MAGAHA, CLERK
CIRCUIT COURT AND COUNTY COURT
ESCAMBIA COUNTY, FLORIDA"
BY: Chris Kellogg D.C.
DATE: 11-25-98

Recorded in Public Records 08/26/2008 at 12:30 PM OR Book 6369 Page 253, Instrument #2008064514, Ernie Lee Magaha Clerk of the Circuit Court Escambia County, FL Recording $10.00

IN THE CIRCUIT COURT IN AND FOR ESCAMBIA COUNTY, FLORIDA

GULF WINDS FEDERAL CREDIT UNION
f/k/a Monsanto Employees Credit Union

Plaintiff,

Case No. 98-1415-SP-11

VS.

Jimmy Hazzard

Defendant

STATE OF FLORIDA
COUNTY OF ESCAMBIA

ADDRESS AFFIDAVIT

Before me, the undersigned authority, personally appeared Deborah C. Putt, who, after being duly sworn, deposes and says:

1. That she is a Collections Officer at GULF WINDS FEDERAL CREDIT UNION.
2. That the mailing address of GULF WINDS FEDERAL CREDIT UNION is: **220 East Nine Mile Rd., Pensacola, FL 32534.**
3. That GULF WINDS FEDERAL CREDIT UNION is the owner and holder of that final judgment entered against **Jimmy Hazzard** on **November 24, 1998** in this case.

FURTHER AFFIANT SAYETH NAUGHT

Deborah C Putt
Deborah C. Putt

STATE OF FLORIDA
COUNTY OF SANTA ROSA

The forgoing instrument was acknowledged before me this **21st August, 2008** Deborah C. Putt, who is personally known to me.

Judy E Hamilton
Judy E. Hamilton
Notary Public

JUDY E. HAMILTON
Notary Public - State of Florida
My Commission Expires Mar 21, 2011
Commission # DD 642559
Bonded Through National Notary Assn.

STATE OF FLORIDA
COUNTY OF ESCAMBIA

CERTIFICATE OF NOTICE OF MAILING
NOTICE OF APPLICATION FOR TAX DEED

CERTIFICATE # 05784 of 2012

I, PAM CHILDERS, CLERK OF THE CIRCUIT COURT OF ESCAMBIA COUNTY, FLORIDA, do hereby certify that I did on September 4, 2014, mail a copy of the foregoing Notice of Application for Tax Deed, addressed to:

JIMMY L HAZZARD 5999 PURSLEY AVE PENSACOLA, FL 32526	KATHRYN A HAZZARD 5999 PURSLEY AVE PENSACOLA, FL 32526

GULF WINDS FEDERAL CREDIT UNION
220 EAST NINE MILE RD
PENSACOLA FL 32534

WITNESS my official seal this 4th day of September 2014.

CLERK & COMPTROLLER ESCAMBIA COUNTY, FLORIDA

PAM CHILDERS
CLERK OF THE CIRCUIT COURT
ESCAMBIA COUNTY, FLORIDA

By:
Emily Hogg
Deputy Clerk

WARNING

THERE ARE UNPAID TAXES ON PROPERTY WHICH YOU OWN OR IN WHICH YOU HAVE A LEGAL INTEREST. THE PROPERTY WILL BE SOLD AT PUBLIC AUCTION ON October 6, 2014, UNLESS THE TAXES ARE PAID. SHOULD YOU NEED FURTHER INFORMATION CONTACT THE CLERK OF THE CIRCUIT COURT IMMEDIATELY AT THE COUNTY COURTHOUSE IN PENSACOLA, FLORIDA, OR CALL 850-595-3793.

NOTICE OF APPLICATION FOR TAX DEED

NOTICE IS HEREBY GIVEN, That **PPF HOLDINGS III LTD** holder of **Tax Certificate No. 05784**, issued the **1st** day of **June, A.D., 2012** has filed same in my office and has made application for a tax deed to be issued thereon. Said certificate embraces the following described property in the County of Escambia, State of Florida, to wit:

S 100 FT OF N 150 FT OF W 132 FT OF E 330 FT OF LT 3 OR 6509 P 1960

SECTION 01, TOWNSHIP 2 S, RANGE 31 W

TAX ACCOUNT NUMBER 093231450 (14-693)

The assessment of the said property under the said certificate issued was in the name of

JIMMY L HAZZARD and KATHRYN A HAZZARD

Unless said certificate shall be redeemed according to law, the property described therein will be sold to the highest bidder at public auction at 9:00 A.M. on the **first** Monday in the month of October, which is the **6th day of October 2014.**

Dated this 4th day of September 2014.

In accordance with the AMERICANS WITH DISABILITIES ACT, if you are a person with a disability who needs special accommodation in order to participate in this proceeding you are entitled to the provision of certain assistance. Please contact Emily Hogg not later than seven days prior to the proceeding at Escambia County Government Complex, 221 Palafox Place Ste 110, Pensacola FL 32502. Telephone: 850-595-3793.

PAM CHILDERS
CLERK OF THE CIRCUIT COURT
ESCAMBIA COUNTY, FLORIDA

By:
Emily Hogg
Deputy Clerk

WARNING

THERE ARE UNPAID TAXES ON PROPERTY WHICH YOU OWN OR IN WHICH YOU HAVE A LEGAL INTEREST. THE PROPERTY WILL BE SOLD AT PUBLIC AUCTION ON October 6, 2014, UNLESS THE TAXES ARE PAID. SHOULD YOU NEED FURTHER INFORMATION CONTACT THE CLERK OF THE CIRCUIT COURT IMMEDIATELY AT THE COUNTY COURTHOUSE IN PENSACOLA, FLORIDA, OR CALL 850-595-3793.

NOTICE OF APPLICATION FOR TAX DEED

NOTICE IS HEREBY GIVEN, That **PPF HOLDINGS III LTD** holder of **Tax Certificate No. 05784**, issued the **1st** day of **June, A.D., 2012** has filed same in my office and has made application for a tax deed to be issued thereon. Said certificate embraces the following described property in the County of Escambia, State of Florida, to wit:

S 100 FT OF N 150 FT OF W 132 FT OF E 330 FT OF LT 3 OR 6509 P 1960

SECTION 01, TOWNSHIP 2 S, RANGE 31 W

TAX ACCOUNT NUMBER 093231450 (14-693)

The assessment of the said property under the said certificate issued was in the name of

JIMMY L HAZZARD and KATHRYN A HAZZARD

Unless said certificate shall be redeemed according to law, the property described therein will be sold to the highest bidder at public auction at 9:00 A.M. on the **first** Monday in the month of October, which is the **6th day of October 2014.**

Dated this 4th day of September 2014.

In accordance with the AMERICANS WITH DISABILITIES ACT, if you are a person with a disability who needs special accommodation in order to participate in this proceeding you are entitled to the provision of certain assistance. Please contact Emily Hogg not later than seven days prior to the proceeding at Escambia County Government Complex, 221 Palafox Place Ste 110, Pensacola FL 32502. Telephone: 850-595-3793.

Post Property:
5999 PURSLEY AVE 32526

PAM CHILDERS
CLERK OF THE CIRCUIT COURT
ESCAMBIA COUNTY, FLORIDA

By:
Emily Hogg
Deputy Clerk

WARNING

THERE ARE UNPAID TAXES ON PROPERTY WHICH YOU OWN OR IN WHICH YOU HAVE A LEGAL INTEREST. THE PROPERTY WILL BE SOLD AT PUBLIC AUCTION ON October 6, 2014, UNLESS THE TAXES ARE PAID. SHOULD YOU NEED FURTHER INFORMATION CONTACT THE CLERK OF THE CIRCUIT COURT IMMEDIATELY AT THE COUNTY COURTHOUSE IN PENSACOLA, FLORIDA, OR CALL 850-595-3793.

NOTICE OF APPLICATION FOR TAX DEED

NOTICE IS HEREBY GIVEN, That **PPF HOLDINGS III LTD** holder of **Tax Certificate No. 05784**, issued the **1st** day of **June, A.D., 2012** has filed same in my office and has made application for a tax deed to be issued thereon. Said certificate embraces the following described property in the County of Escambia, State of Florida, to wit:

S 100 FT OF N 150 FT OF W 132 FT OF E 330 FT OF LT 3 OR 6509 P 1960

SECTION 01, TOWNSHIP 2 S, RANGE 31 W

TAX ACCOUNT NUMBER 093231450 (14-693)

The assessment of the said property under the said certificate issued was in the name of

JIMMY L HAZZARD and KATHRYN A HAZZARD

Unless said certificate shall be redeemed according to law, the property described therein will be sold to the highest bidder at public auction at 9:00 A.M. on the **first** Monday in the month of October, which is the **6th day of October 2014.**

Dated this 4th day of September 2014.

In accordance with the AMERICANS WITH DISABILITIES ACT, if you are a person with a disability who needs special accommodation in order to participate in this proceeding you are entitled to the provision of certain assistance. Please contact Emily Hogg not later than seven days prior to the proceeding at Escambia County Government Complex, 221 Palafox Place Ste 110, Pensacola FL 32502. Telephone: 850-595-3793.

Personal Services:

JIMMY L HAZZARD
5999 PURSLEY AVE
PENSACOLA, FL 32526

PAM CHILDERS
CLERK OF THE CIRCUIT COURT
ESCAMBIA COUNTY, FLORIDA

By:
Emily Hogg
Deputy Clerk

WARNING

THERE ARE UNPAID TAXES ON PROPERTY WHICH YOU OWN OR IN WHICH YOU HAVE A LEGAL INTEREST. THE PROPERTY WILL BE SOLD AT PUBLIC AUCTION ON October 6, 2014, UNLESS THE TAXES ARE PAID. SHOULD YOU NEED FURTHER INFORMATION CONTACT THE CLERK OF THE CIRCUIT COURT IMMEDIATELY AT THE COUNTY COURTHOUSE IN PENSACOLA, FLORIDA, OR CALL 850-595-3793.

NOTICE OF APPLICATION FOR TAX DEED

NOTICE IS HEREBY GIVEN, That **PPF HOLDINGS III LTD** holder of **Tax Certificate No. 05784**, issued the **1st** day of **June, A.D., 2012** has filed same in my office and has made application for a tax deed to be issued thereon. Said certificate embraces the following described property in the County of Escambia, State of Florida, to wit:

S 100 FT OF N 150 FT OF W 132 FT OF E 330 FT OF LT 3 OR 6509 P 1960

SECTION 01, TOWNSHIP 2 S, RANGE 31 W

TAX ACCOUNT NUMBER 093231450 (14-693)

The assessment of the said property under the said certificate issued was in the name of

JIMMY L HAZZARD and KATHRYN A HAZZARD

Unless said certificate shall be redeemed according to law, the property described therein will be sold to the highest bidder at public auction at 9:00 A.M. on the **first** Monday in the month of October, which is the **6th day of October 2014.**

Dated this 4th day of September 2014.

In accordance with the AMERICANS WITH DISABILITIES ACT, if you are a person with a disability who needs special accommodation in order to participate in this proceeding you are entitled to the provision of certain assistance. Please contact Emily Hogg not later than seven days prior to the proceeding at Escambia County Government Complex, 221 Palafox Place Ste 110, Pensacola FL 32502. Telephone: 850-595-3793.

Personal Services:

KATHRYN A HAZZARD
5999 PURSLEY AVE
PENSACOLA, FL 32526

PAM CHILDERS
CLERK OF THE CIRCUIT COURT
ESCAMBIA COUNTY, FLORIDA

By:
Emily Hogg
Deputy Clerk